Date: 19/12-2016 GB

Navigation:

1
2 **Table of Contents**

A-Z **Alphabetic index**

Pump Unit

Spare Parts for
APV250
Model year 2015 - 2018

Agrometer a/s

Fælledvej 10 • 7200 Grindsted • Tel. +45 76 72 13 00 • Fax +45 76 72 13 98
www.agrometer.dk • agrometer@agrometer.dk

Table of Contents

Hose reel 4
Hose protection 5
Crane 6
Suction Hose 7
AGM Turbo filler 6” 8
Support Bearing Assembly 9
Hose guide rollers 10
Pipe system 11
Pipe system - Anti Cavitation 12
Pipe system - Flow Meter 13
Pipe system - Self-priming Unit 14
Pipe system - Water input 15
Pipe system - Booster 16
Pipe system - Air 17
Water Tank 18
Water Tank - with buffer tank 19
Diesel Tank 20
Hydraulic 21
Radiator - Tier 3A 22
Radiator - Tier 3B 23
Engine - Tier 3B 24
Engine - Tier 3B 25
Exhaust Filter - Tier 3B 26
Compressor 27
Coupling 28
Gear shifting function 29
Chassis 30
Control box 31
Battery Box 32
Brakes - Hydraulic 33
Brakes - Pneumatic 34
Support leg 35
BAUER SX2000 pump 36
Hub for Hydraulic brake 37
Hub for Pneumatic brake 38
Screw compressor compact module NK 200 39
Screw compressor NK 200 - Filter 40
Screw compressor NK 200 - Components 41
Screw compressor NK 200 - Maintenance Kit, Bearing and Shaft Sealing 42
Screw compressor NK 200 - Maintenance Kit: Minimum Pressure Valve, Double Separator 43
Screw compressor NK 200 - Maintenance Kit: Intake Valve 44
Screw compressor NK 200 - Single Parts: Basic Module 45
Screw compressor NK 200 - Single Parts: Front Cover 46
Screw compressor NK 200 - Single Parts: Separator vessel and Double separator 47
Screw compressor NK 200 - Single Parts: Thermostat head 48
Screw compressor NK 200 - Single Parts: Control Block Electric 49
Screw compressor NK 200 - Single Parts: Electric Control Block, Control Valve 50
Screw compressor NK 200 - Single Parts: Intake Control and Intake Filter 51
BAUER Self-priming Unit - T-piece 52
BAUER Self-priming Unit - Evacuating pump with hydro gear 53
BAUER Self-priming Unit - Evacuating pump 54

Alphabetic index

AGM Turbo filler 6” 8
Battery Box 32
BAUER Self-priming Unit - Evacuating pump 54
BAUER Self-priming Unit - Evacuating pump with hydro gear 53
BAUER Self-priming Unit - T-piece 52
BAUER SX2000 pump 36
Brakes - Hydraulic 33
Brakes - Pneumatic 34
Chassis 30
Compressor 27
Control box 31
Coupling 28
Crane 6
Diesel Tank 20
Engine - Tier 3B 24
Engine - Tier 3B 25
Exhaust Filter - Tier 3B 26
Gear shifting function 29
Hose guide rollers 10
Hose protection 5
Hose reel 4
Hub for Hydraulic brake 37
Hub for Pneumatic brake 38
Hydraulic 21
Pipe system 11
Pipe system - Air 17
Pipe system - Anti Cavitation 12
Pipe system - Booster 16
Pipe system - Flow Meter 13
Pipe system - Self-priming Unit 14
Pipe system - Water input 15
Radiator - Tier 3A 22
Radiator - Tier 3B 23
Screw compressor compact module NK 200 39
Screw compressor NK 200 - Components 41
Screw compressor NK 200 - Filter 40
Screw compressor NK 200 - Maintenance Kit, Bearing and Shaft Sealing 42
Screw compressor NK 200 - Maintenance Kit: Intake Valve 44
Screw compressor NK 200 - Maintenance Kit: Minimum Pressure Valve, Double Separator 43
Screw compressor NK 200 - Single Parts: Basic Module 45
Screw compressor NK 200 - Single Parts: Control Block Electric 49
Screw compressor NK 200 - Single Parts: Electric Control Block, Control Valve 50
Screw compressor NK 200 - Single Parts: Front Cover 46
Screw compressor NK 200 - Single Parts: Intake Control and Intake Filter 51
Screw compressor NK 200 - Single Parts: Separator vessel and Double separator 47
Screw compressor NK 200 - Single Parts: Thermostat head 48
Suction Hose 7
Support Bearing Assembly 9
Support leg 35
Water Tank 18
Water Tank - with buffer tank 19

Hose reel

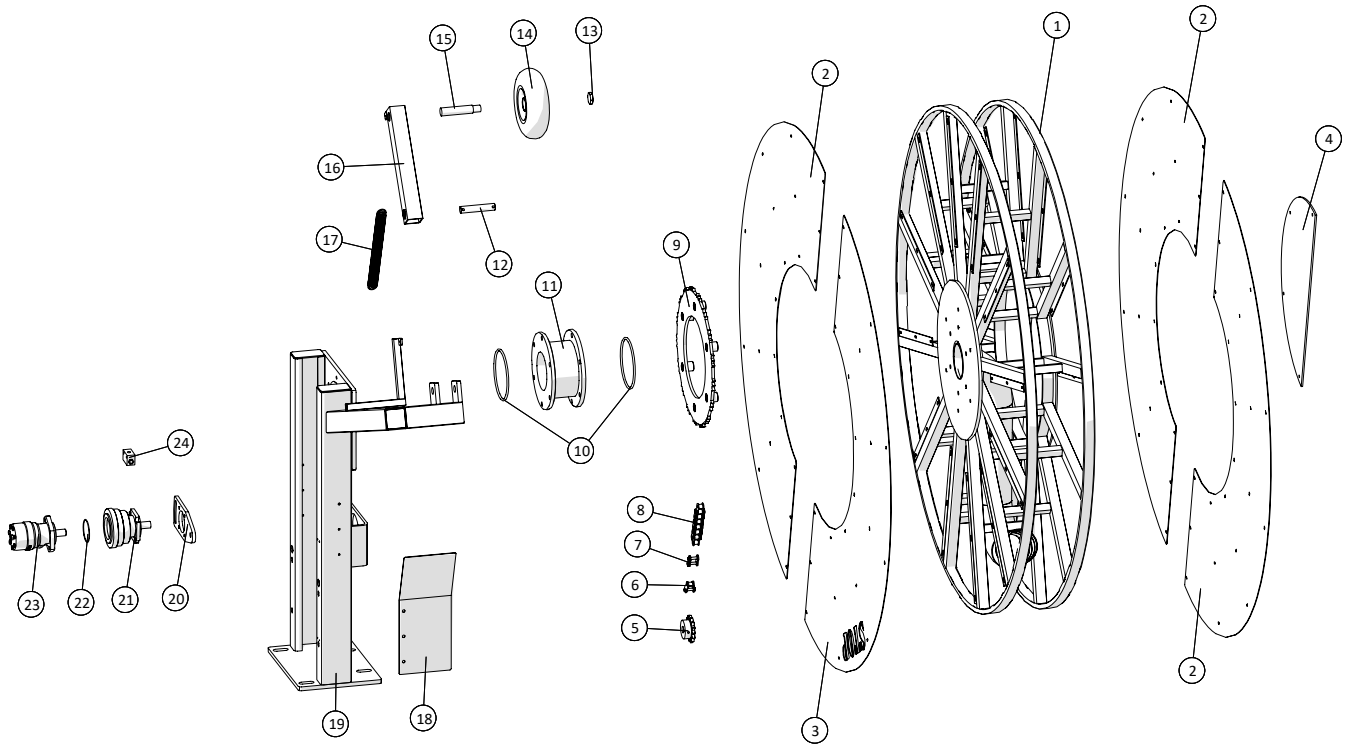

Fælledvej 10 • DK-7200 Grindsted • Tel. +45 76 72 13 00 • Fax +45 76 72 13 98

Hose reel				
Pos. no.	**Item no.**	**Pcs.**	**Description**	**Note**
1	2501790415	1	Hose reel	
2	250181337	3	Cover plate stainless steel	
3	250181490	1	Cover plate stainless steel with stop	
4	2501790415-12	1	Cover plate middle	
5	25017275	1	Chain wheel ¾" z=15	
6	1535191-12	1	Closing links cranked ¾"	
7	1535191-11	1	Closing links ¾"	
8	15351911	1	Roller chain ¾"	
9	2501790420	1	Plate wheels for hose reel ¾" z=85	
10	21040837	2	O-ring for slewing ring	
11	21040820	1	Slewing ring MZ DN150	
12	2501790480	1	Pin	
13	15110611575	1	Nut M16x1, 5	
14	25017329	1	Crane wheel	
15	25017345	1	Shaft 25mm	
16	25030122	1	Lever for wheel	
17	1514004232350	1	Tension spring Ø32x3,5x88vx350	
18	2501790410-07	1	Chain guard	
19	250180071	1	Hose reel Stand	
20	2501790421	1	Console for S.A.H.R brake	
21	2514851451	1	S.A.H.R brake	
22	2514851451-1	1	O-ring	
23	25017265	1	Oil motor OMR 200 HPS Ø25 DANFOSS	
24	25017270	1	Exchange valve VT-1/4	

Hose protection

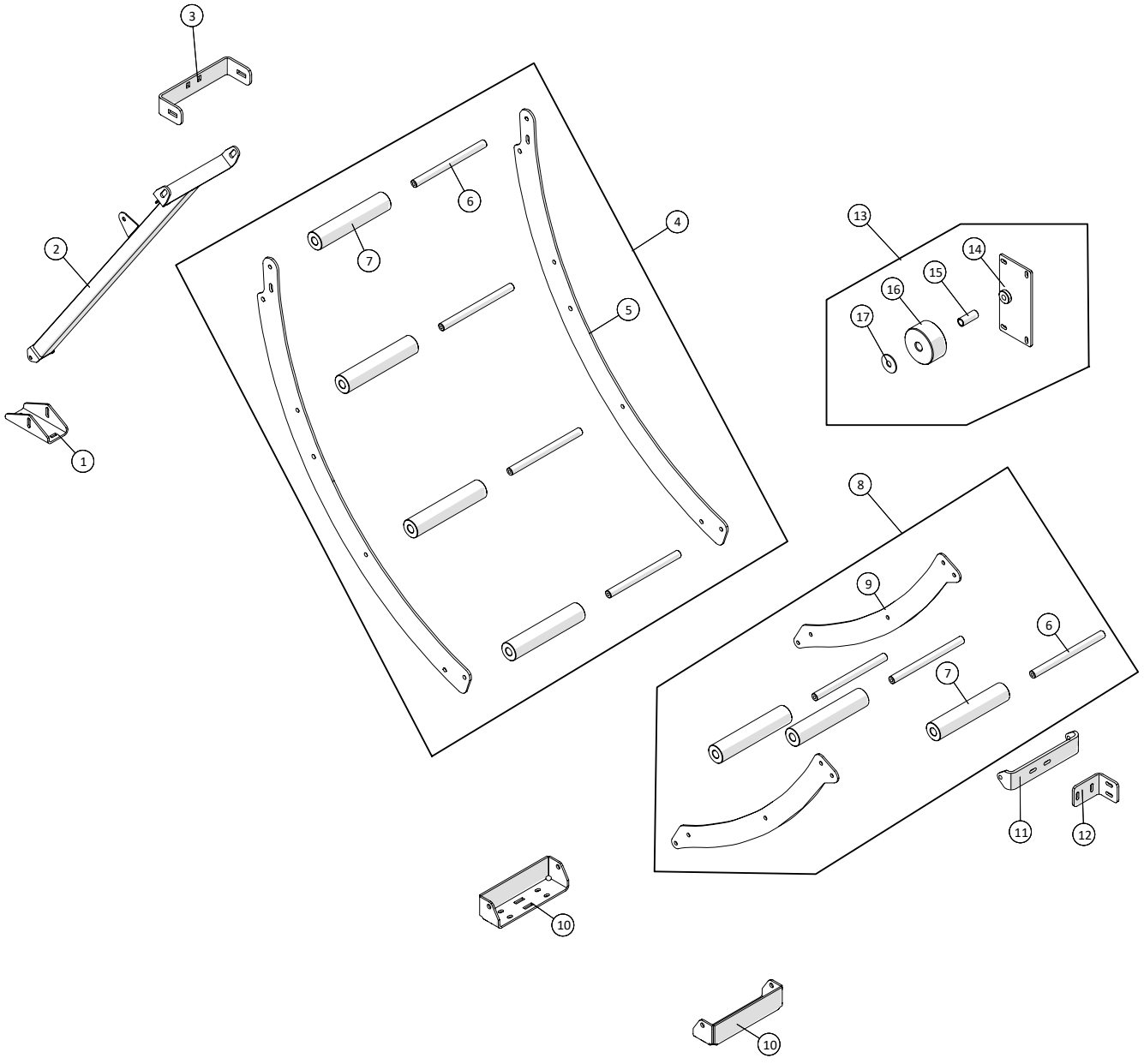

Fælledvej 10 • DK-7200 Grindsted • Tel. +45 76 72 13 00 • Fax +45 76 72 13 98

Hose protection				
Pos. no.	**Item no.**	**Pcs.**	**Description**	**Note**
1	250180615	1	Bottom attachment for hose guide	
2	250180541	1	Cross brace for hose guide	
3	250181290	1	Bracket	
4	250180546	1	Hose protection	
5	250180514	2	Hose protection plate	
6	250180515	7	Shaft for hose reel	
7	250180516	7	POM roller for hose	
8	250180551	1	Small hose guide	
9	250180547	2	Side plate for small hose guide	
10	250180537	2	Bracket for hose guide	
11	250180549	1	Clamp for hose guide	
12	250180550	1	Bracket for clamp for hose guide	
13	250180635	1	Roller by crane stand	
14	250180640	1	Backplate for roller by crane stand	
15	250180641	1	Shaft for roller by crane stand	
16	250180636	1	Roller by crane stand	
17		1	Washer 16mm	

Crane

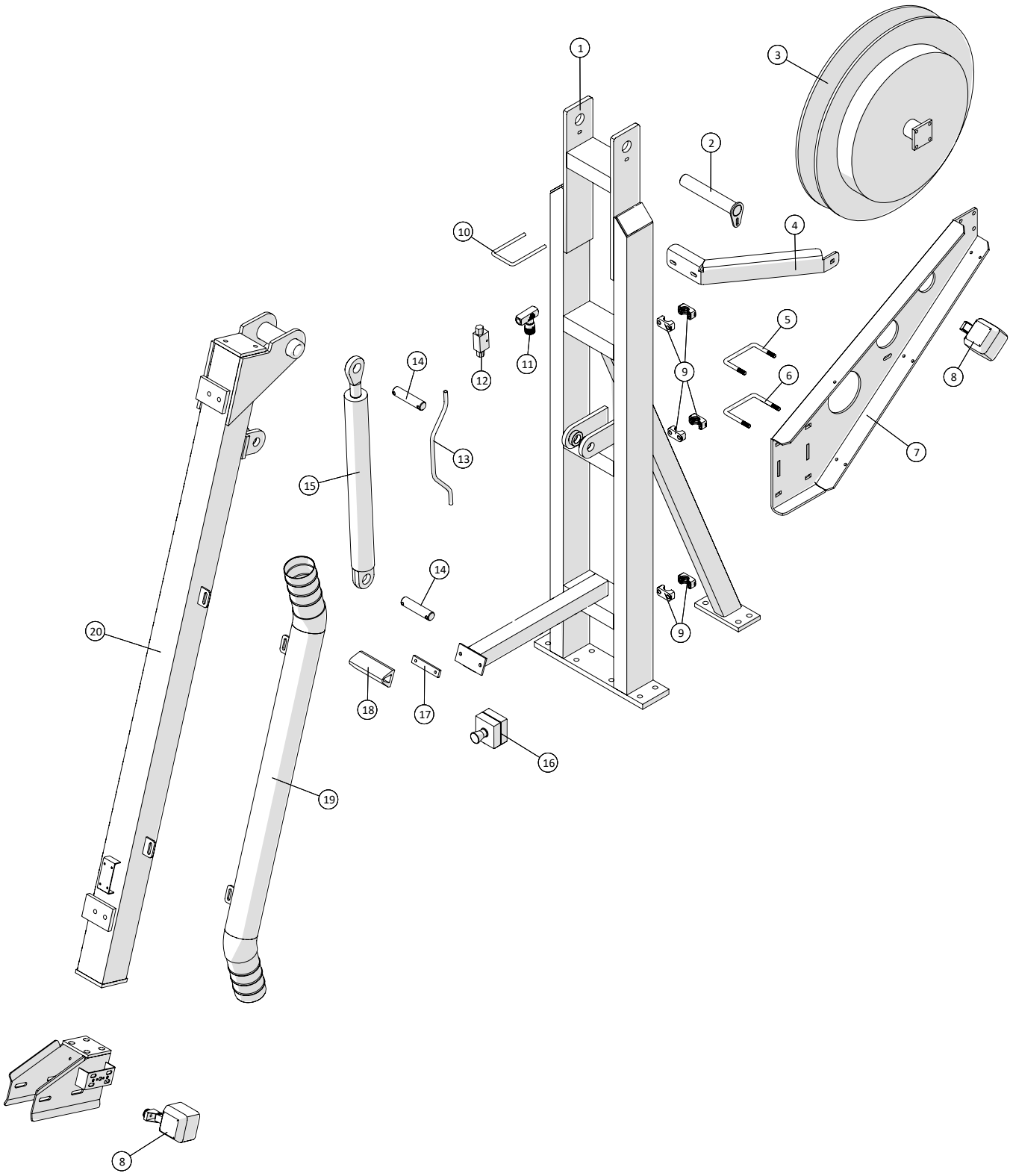

Crane				
Pos. no.	**Item no.**	**Pcs.**	**Description**	**Note**
1	250179032	1	Crane stand	
2	2501790388	1	Pin Ø40	
3	250179673-01	1	Hose reel	
4	250181329	1	Bracing for hose reel	
5	250179637	1	Bracket	
6	251476634940	1	U-clamp M12	
7	250179659	1	Suspension for hydraulic hose reel	
8	2514861061	2	Work lamp	
9	51000030-01	6	STAUFF Clamp Body, single 30mm	
10	251476634580	1	U-clamp	
11	25017200	1	Throttle-valve - TOGNELLA	
12	25017185	1	Double locking valve ¼” VBPDE	
13	2501790287	1	Hydraulic pipe for crane cylinder	
14	2501790389	2	Pin Ø30	
15	25017105	1	Hydraulic cylinder Lmin=915mm	
	250135106035	1	Seal kits for cyl. 25017105	
16	25030020	1	Emergency stop	
17	250180925	1	Mounting plate	
18	21201052	0,15m	Fender Rubber 60x50mm	
19	250180428	1	Pipe for stirring	
20	2501790325	1	Lever High Flow	

Suction Hose

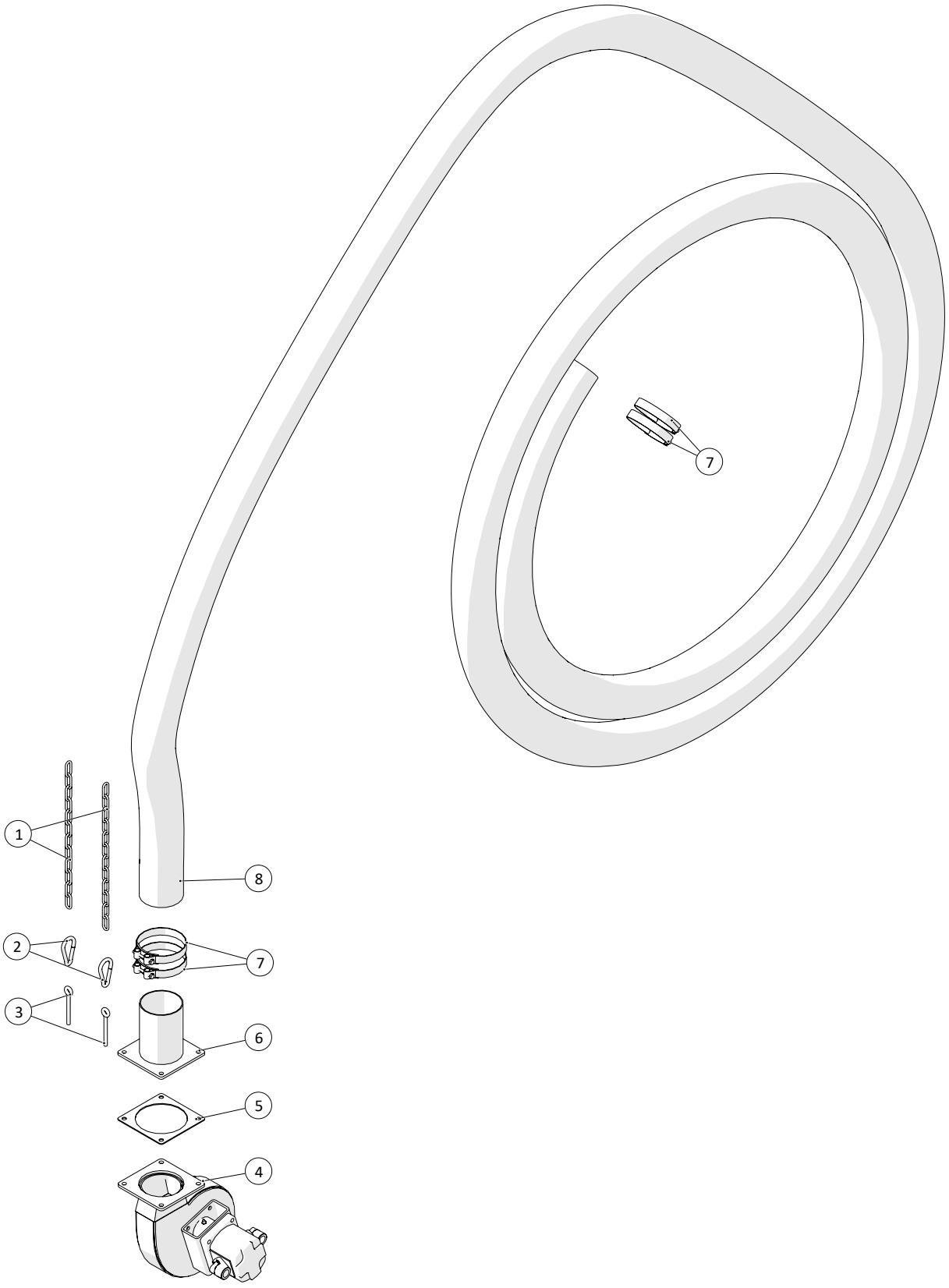

Fælledvej 10 • DK-7200 Grindsted • Tel. +45 76 72 13 00 • Fax +45 76 72 13 98

Suction Hose				
Pos. no.	**Item no.**	**Pcs.**	**Description**	**Note**
1	1513KS10020110	2x45cm	Chain	
2	12280102	2	Snap hook stainless steel	
3	1326901085	2	Eye bolts M10x100	
4	23500062	1	AGM Turbo Filler	Page 8, AGM Turbo Filler
5	20140715	1	MZ rubber gasket 4", 5", 6"	
6	20140845	1	Hose connector 5"MZ flange x 127mm	
7	16200740	4	Hoseclamp 140-148mm	
8	16010180	1	HEDUFLEX rubber hose 5"/Ø127	

AGM Turbo filler

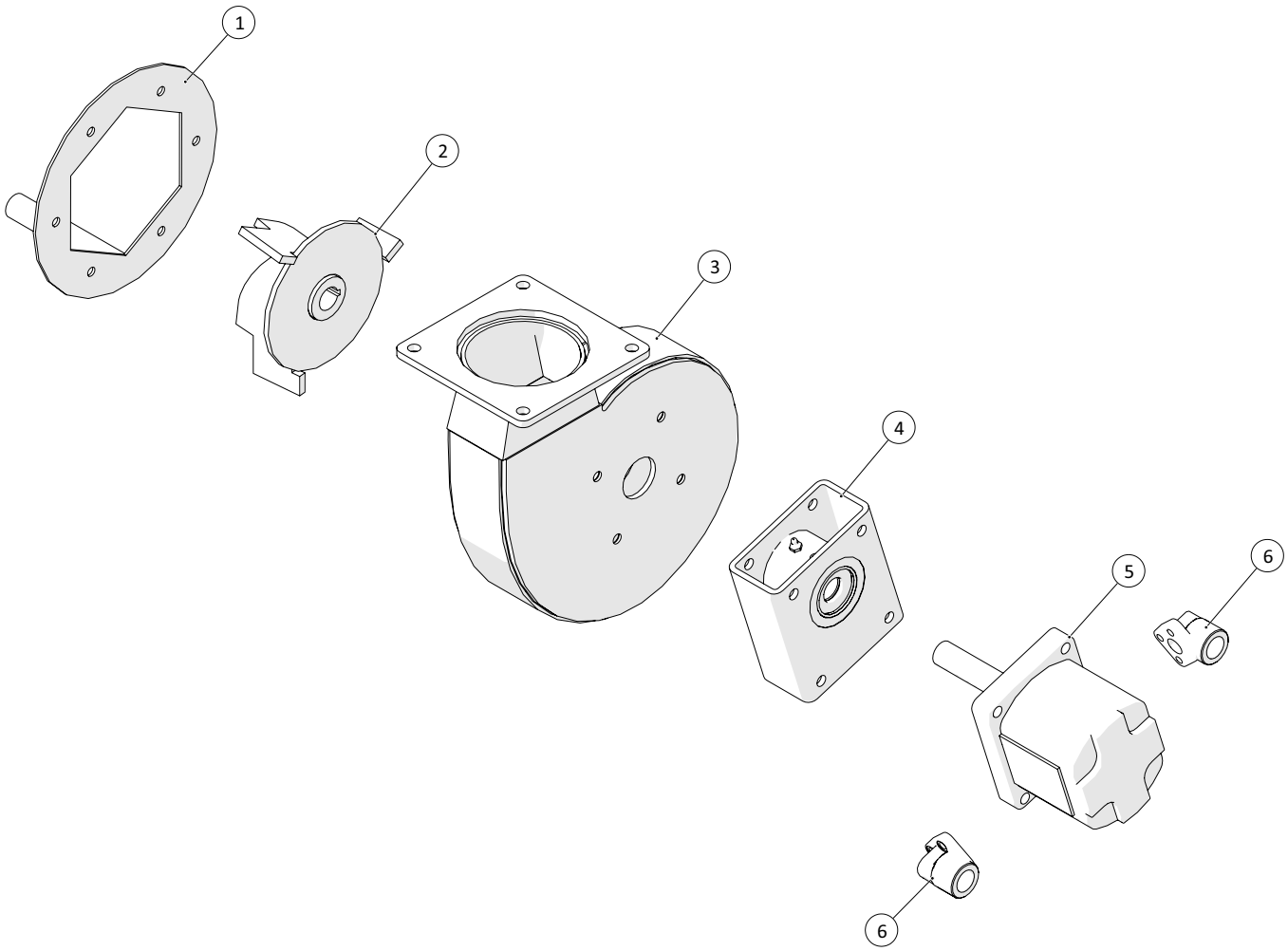

Fælledvej 10 • DK-7200 Grindsted • Tel. +45 76 72 13 00 • Fax +45 76 72 13 98

AGM turbo filler				
Pos. no.	**Item no.**	**Pcs.**	**Description**	**Note**
1	250181057	1	Inlet knife	
2	2350770112	1	Impeller 6"	
3	2350771515	1	Pump housing 6"	
4	2350772562000	1	Support Bearing - complete	Page 9, Support Bearing
5	2350218732000	1	Hydraulic engine 6"	
6	25017095	2	Port flange for hydraulics 3/4"	

Support Bearing Assembly

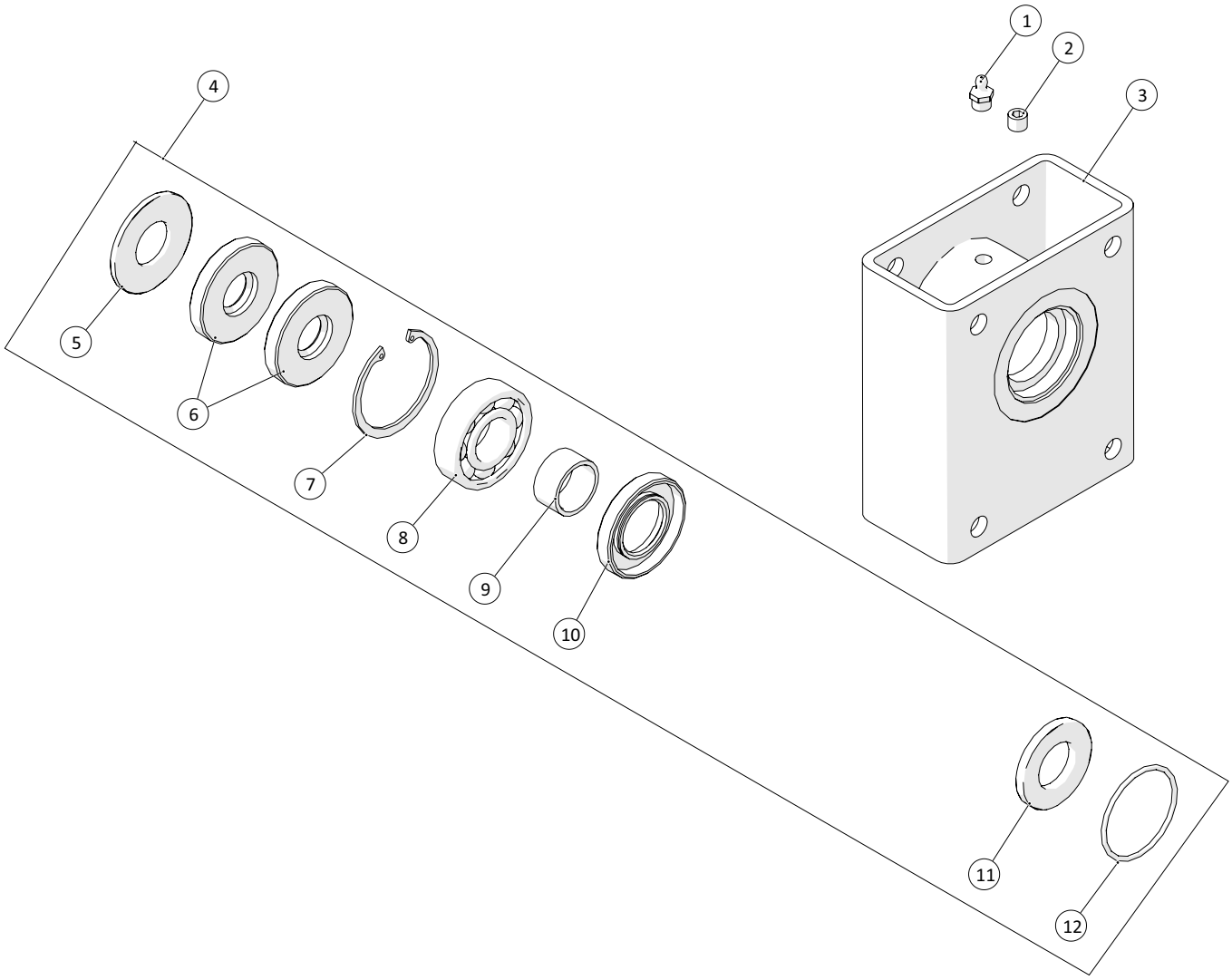

Fælledvej 10 • DK-7200 Grindsted • Tel. +45 76 72 13 00 • Fax +45 76 72 13 98

Support Bearing				
Pos. no.	**Item no.**	**Pcs.**	**Description**	**Note**
1	2350208392000	1	Grease nipple 1/8"	
2	2350228670000	1	Plug 1/8"	
3	2350772561000	1	Aksel bearing	
4	2350772561000-1	1	Support Bearing kit	
5	2350405991000	1	Washer Ø57xØ25,5	
6	2350219158000	2	Shaft Sealing	
7	2350229927000	1	Retaining ring	
8	2350218429000	1	Ball bearing SKF RLS8	
9	2350408417000	1	Shaft sealing	
10	2350219162000	1	Shaft sealing	
11	2350405992000	1	Washer Ø50,5xØ27	
12	2350219159000	1	O-ring Ø49,5	

Hose guide rollers

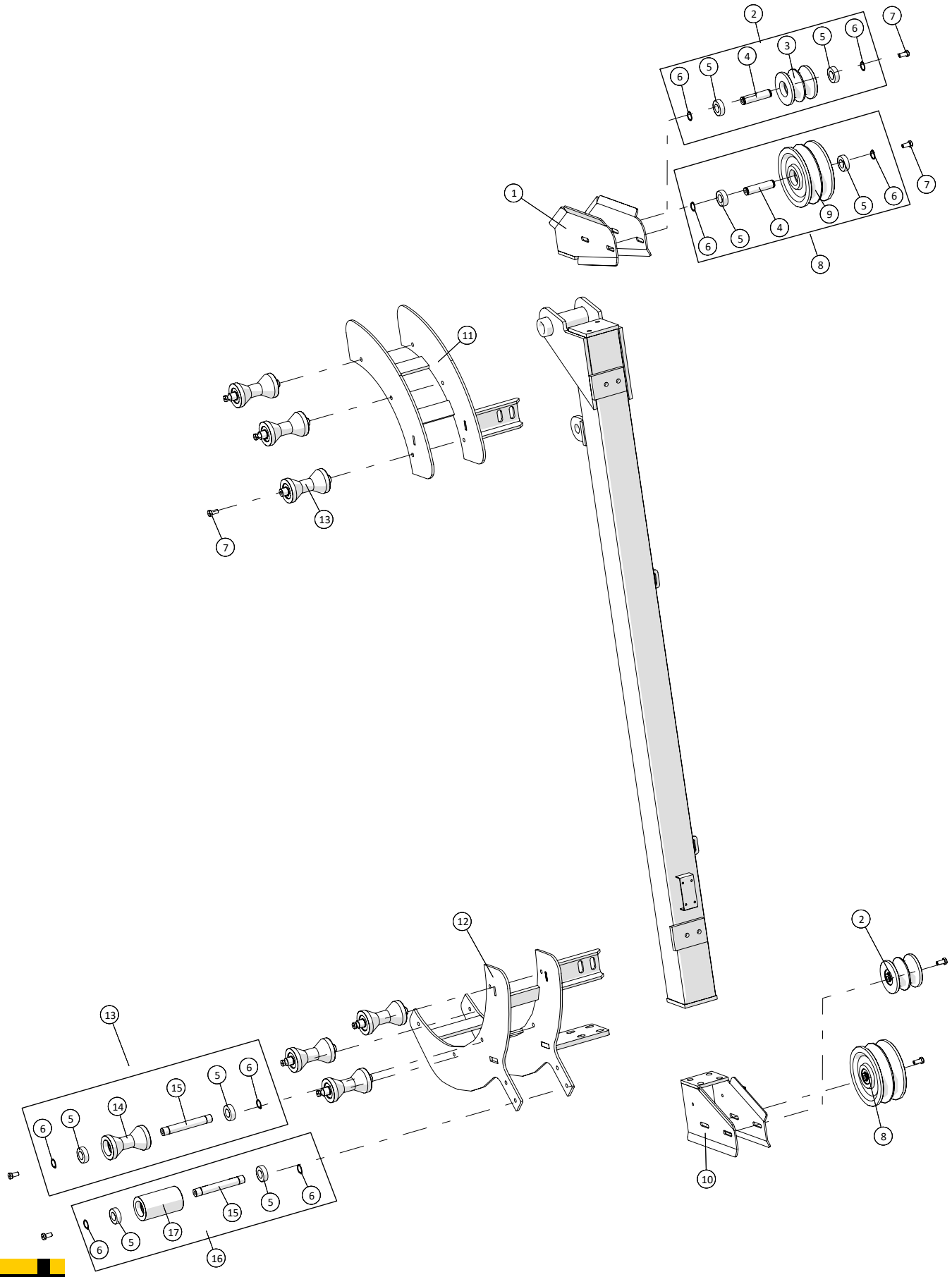

Fælledvej 10 • DK-7200 Grindsted • Tel. +45 76 72 13 00 • Fax +45 76 72 13 98

Hose guide rollers				
Pos. no.	**Item no.**	**Pcs.**	**Description**	**Note**
1	250179690	1	Rear suspension for reversing rollers	
2	250179749	2	Counterroller complete	
3	250179669	2	Counterroller for hydraulic hose reeling	
4	250179696	4	Shaft for roller - hydraulic hose reeling	
5	19300620502	24	Ball bearing 6205 2RS	
6	15110616037	24	Retaining ring A25	
7	2501790390	12	Lubricating Bolt (crane lever)	
8	250179748	2	Turning Roller complete	
9	250179668	2	Turning rollers for hose reels	
10	250179700	1	Rear suspension for turning rollers	
11	2501790335-01	1	Rear hose guide	
12	2501790330-10	1	Front hose guide	
13	2501790384	7	Roller - complete	
14	2501790385	7	Roller - separately	
15	2501790370	8	Shaft for roller	
16	2501790364	1	Top roller - complete	
17	2501790365	1	Top roller - separately	

Pipe system

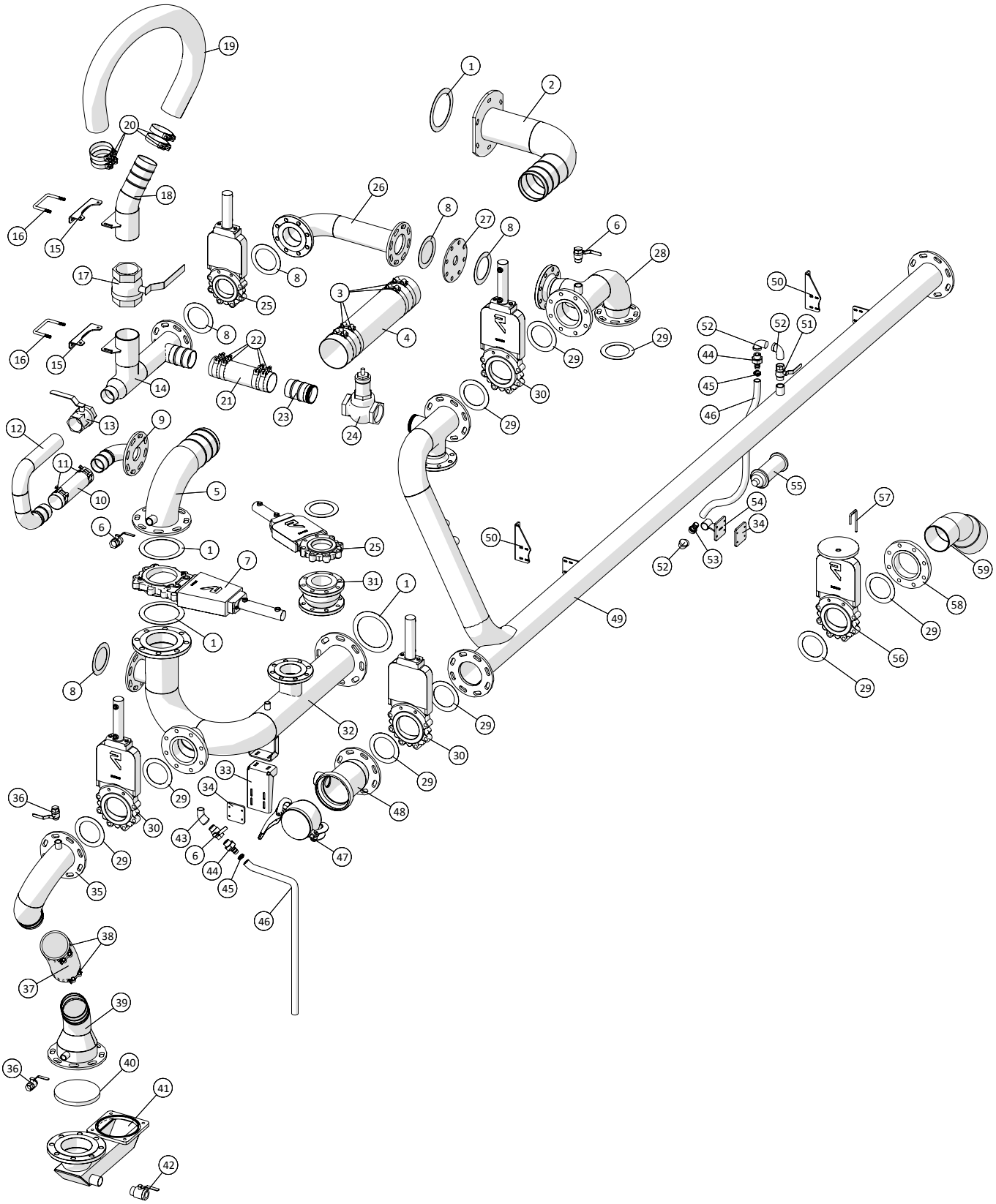

Pipe system				
Pos. no.	**Item no.**	**Pcs.**	**Description**	**Note**
1	13250555	4	Flange gasket NW150 218x169mm	
2	250180148	1	Outlet from hose reel	
3	16200744	4	Clamp 162-174mm	
4	16010185	0,8m	HEDUFLEX rubber hose 6”/Ø152	
5	250180146	1	Pipe for bypass	
6	13100068	3	Ball valve female/male 1”	
7	20144150	1	Ramus gate-valve w/cylinder DN150 6”	
8	13250546	6	Fiber Gasket NW100 162x115mm (3mm)	
9	250180983	1	Pipe 2 for switching	
10	16050200	0,3m	ARMTEX pressure hose black 2½”	
11	16200325	2	Clamp 75-85mm	
12	250180984	1	Pipe 2 sekund part for switching	
13	13100016	1	Ball valve female 2 ½”	
14	250180714	1	Pipe for switching	
15	250180334	2	Brackets for return	
16	250179637	2	Bracket	
17	13100020	1	Ball valve female 4”	
18	250180722	1	Pipe 3 for switching	
19	16010175	3m	HEDUFLEX rubber hose 4”/ Ø102	
20	16200734	4	Clamp 113-121mm	
21	16050210	0,4m	ARMTEX pressure hose black 3½”	
22	16200728	4	Clamp 92-97mm	
23	250180195	1	Short pipe for pressure	
24	13080025	1	Relief Valve w/spring 3”	
25	20144100	2	Ramus gate-valve w/cylinder DN100 4”	
26	250180372	1	Bypass pipe	
27	250179745	1	Flange Ø60 hole 4”	
28	250180185	1	Front pipe for outlet	
29	13250545	9	Flange gasket NW100 162x115mm	
30	20144125	3	Ramus gate-valve w/cylinder DN125 5”	
31	13250700DN100	1	Rubber compensator DN100 4”	
32	250180143	1	Inlet pipe	
33	250180147	1	Mounting plate for pipe	
34	250180084	2	Mounting plate	
35	250180373	1	Pipe 1 for water	
36	13100066	2	Ball valve female/male ¾”	
37	16010177	0,4m	HEDUFLEX rubber hose 4½”/ Ø110	
38	16200740	2	Clamp 140-148mm	
39	250180374	1	Pipe 2 for water	

Date: 19/12-2016	**Pump Unit APV250**	1 2	**A-Z**
11-1	Model year 2015 - 2018		

Pipe system

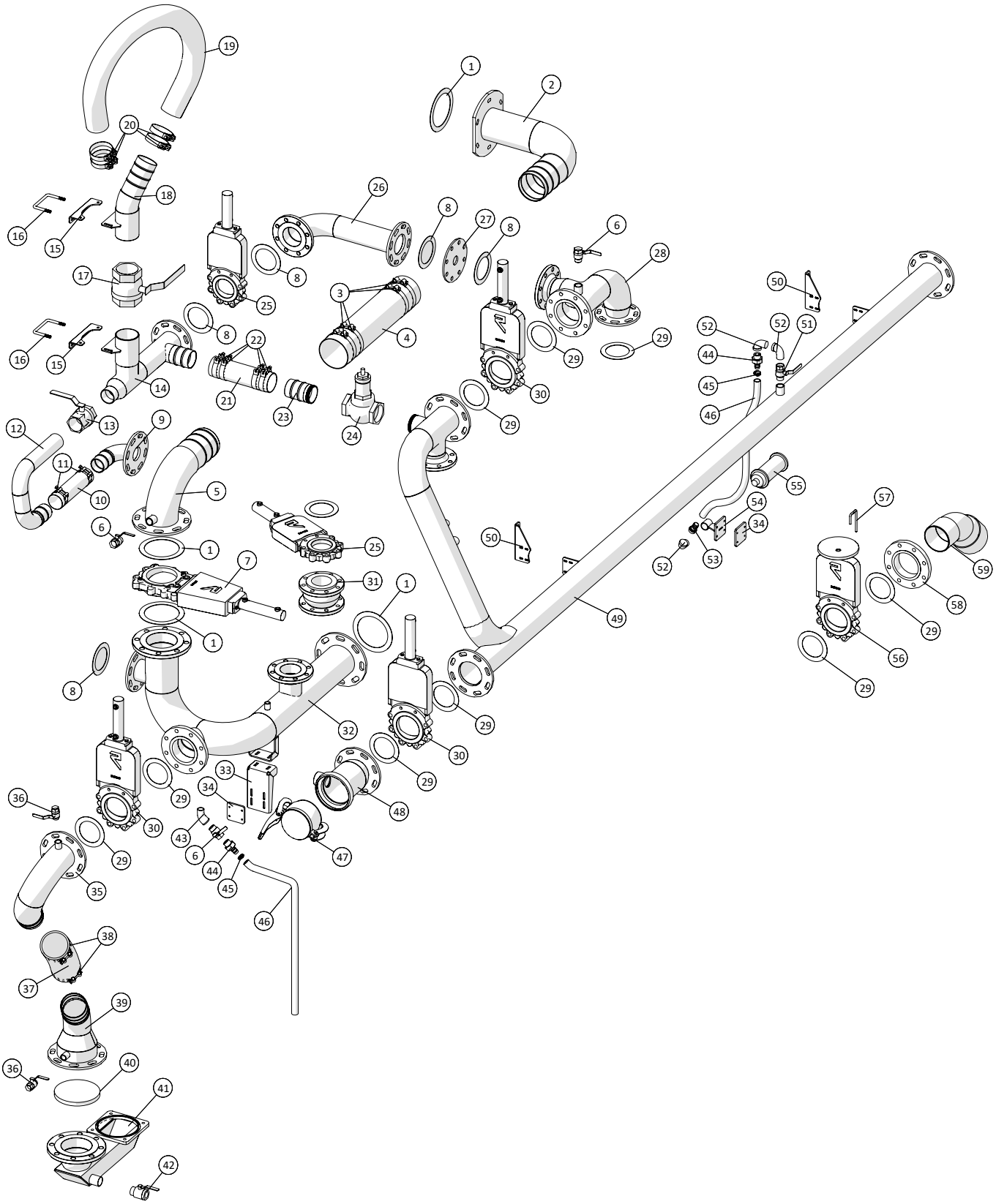

Pipe system				
Pos. no.	**Item no.**	**Pcs.**	**Description**	**Note**
40	13692125	1	Check valve INOX DN150	
41	250180376	1	Outlet pipe for water tank	
42	13100070	1	Ball valve female/male 1¼”	
43	000121408	1	Elbow 45° No.121 galv. 1”	
44	1044629425	2	Plastic connector w/BSP 1”x25mm	
45	16200666	2	Clamp 20-32mm	
46	16080240	1m	Clear reinforced hose 1” (25.0x32,0)	
47	14050125	1	BAUER HK end ball 159mm	
48	250180194	1	Pipe for ball	
49	250180186	1	Outlet pipe large	
50	250180158	2	Bracket for outlet pipe	
51	13100098	1	Ball valve female 1”	
52	000092408	3	Elbow 90° No.92 galv. 1”	
53	14250035	1	Hose connector brass w/BSP 1”	
54	250180667	1	Bracket for silencer	
55	25017552	1	Silencer	
56	20144130	1	Ramus gate valve w/handwheel DN125	
57	250180750	1	Locking pin for Ramus handwheel	
58	13250242	1	Threaded flange DS581 galv. DN125x5”	
59	25017470	1	Elbow 45° 5”x6” BSP	

Pipe system - Anti Cavitation

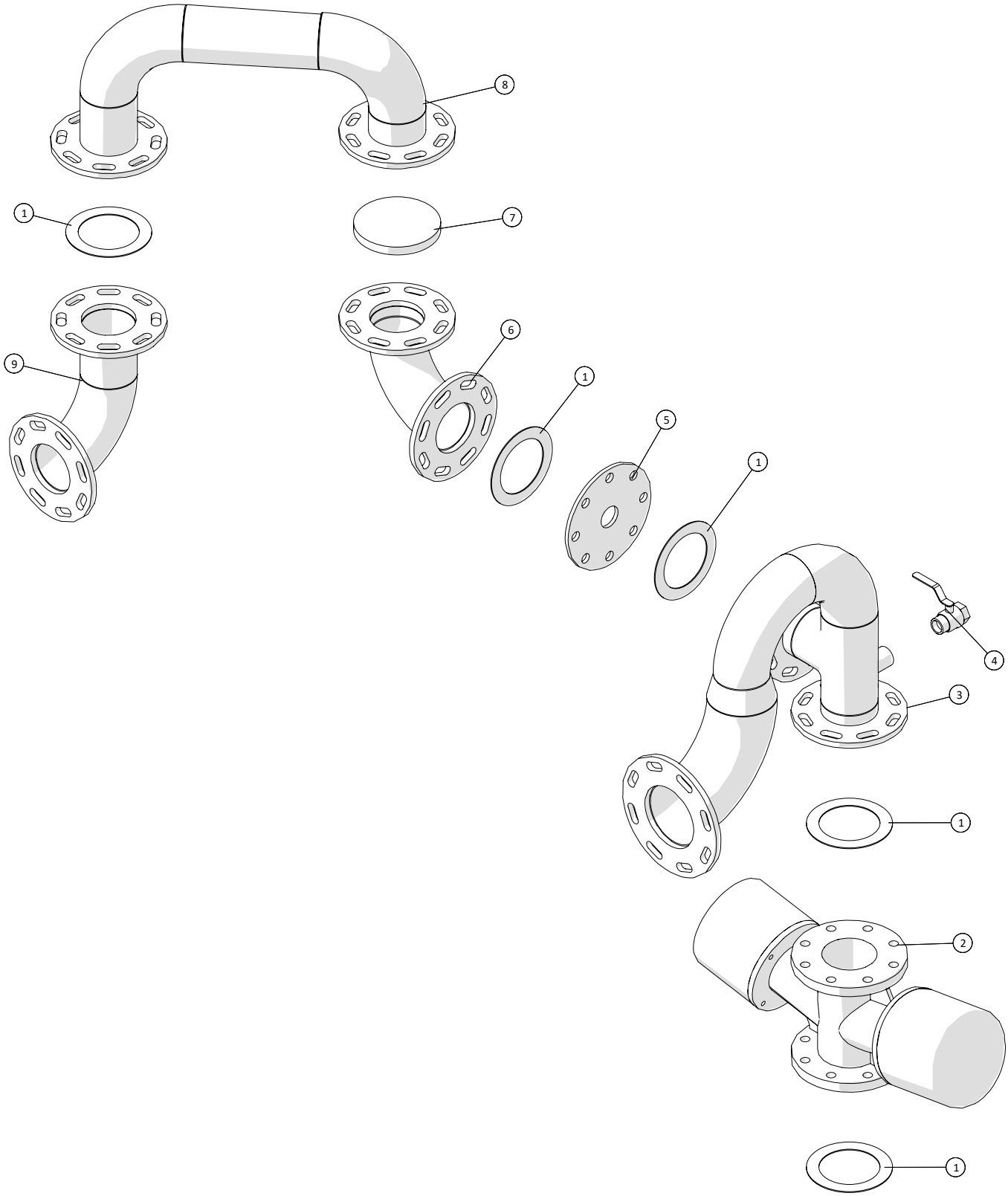

Fælledvej 10 • DK-7200 Grindsted • Tel. +45 76 72 13 00 • Fax +45 76 72 13 98

Pipe system - Anti Cavitation				
Pos. no.	**Item no.**	**Pcs.**	**Description**	**Note**
1	13250545	5	Flange gasket NW100 162x115mm	
2	23093441000	1	Anti Cavitation Valve	
3	250180752	1	Outlet pipe for pressure control valve	
4	13100068	1	Ball valve female/male 1”	
5	250179745	1	Flange Ø60 hole 4”	
6	250180761	1	Bypass pipe 1	
7	13692100	1	Check valve INOX DN100	
8	250180762	1	Bypass pipe 2	
9	250180815	1	Bypass pipe 3	

Pipe system - Flow Meter

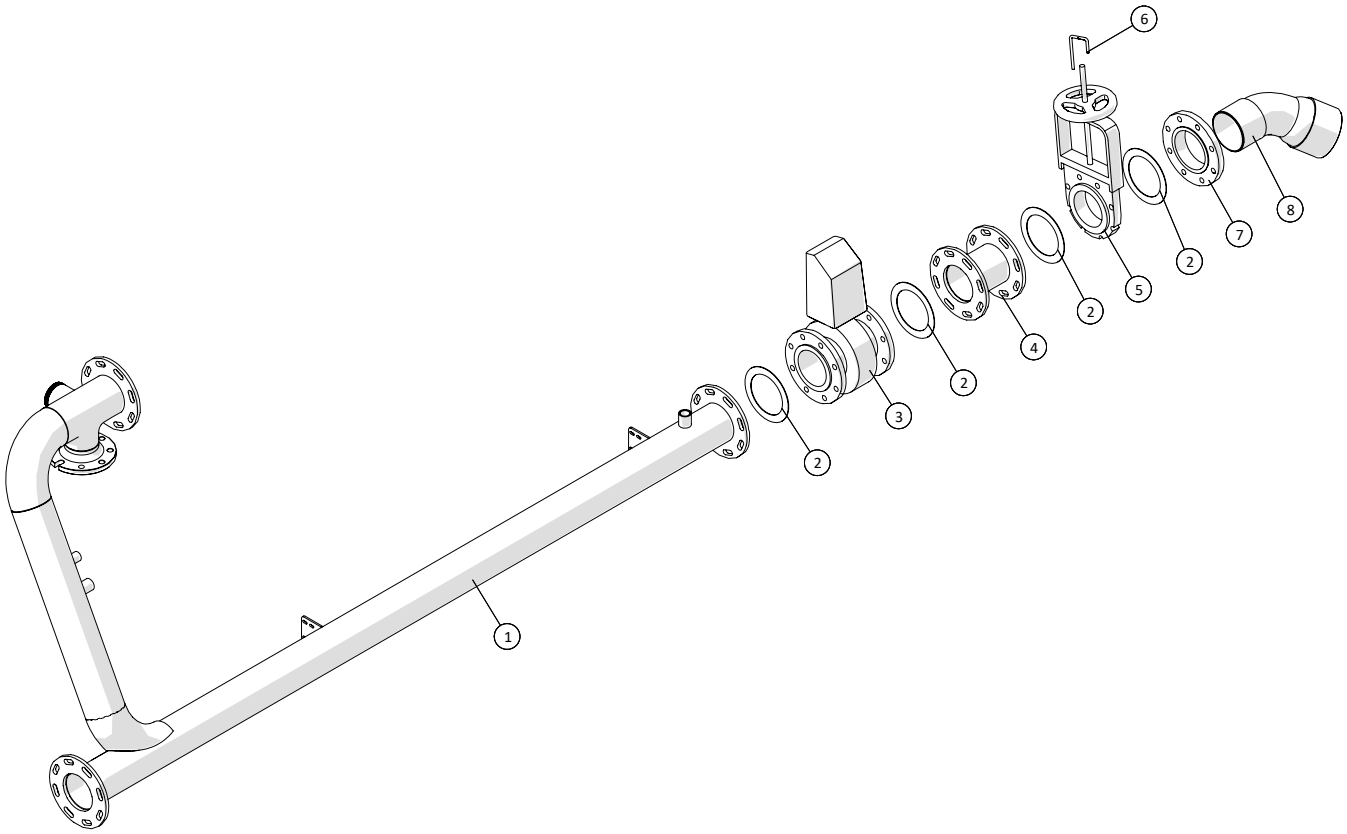

Fælledvej 10 • DK-7200 Grindsted • Tel. +45 76 72 13 00 • Fax +45 76 72 13 98

Pipe system - Flow Meter				
Pos. no.	**Item no.**	**Pcs.**	**Description**	**Note**
1	250180960	1	Outlet pipe	
2	13250550	4	Flange gasket NW125 192x141mm	
3	2514850374	1	Flow Meter 24V MAG3100W DN125/5”	
	2513023-1		MAG500 Signal converter MK1 24Volt	
4	250180962	1	Outlet pipe	
5	20144130	1	Ramus gate valve w/handwheel DN125	
6	250180750	1	Locking pin for Ramus handwheel	
7	13250242	1	Threaded flange DS581 galv. DN125x5”	
8	25017470	1	Elbow 45° 5”x6” BSP	

Pipe system - Self-priming Unit

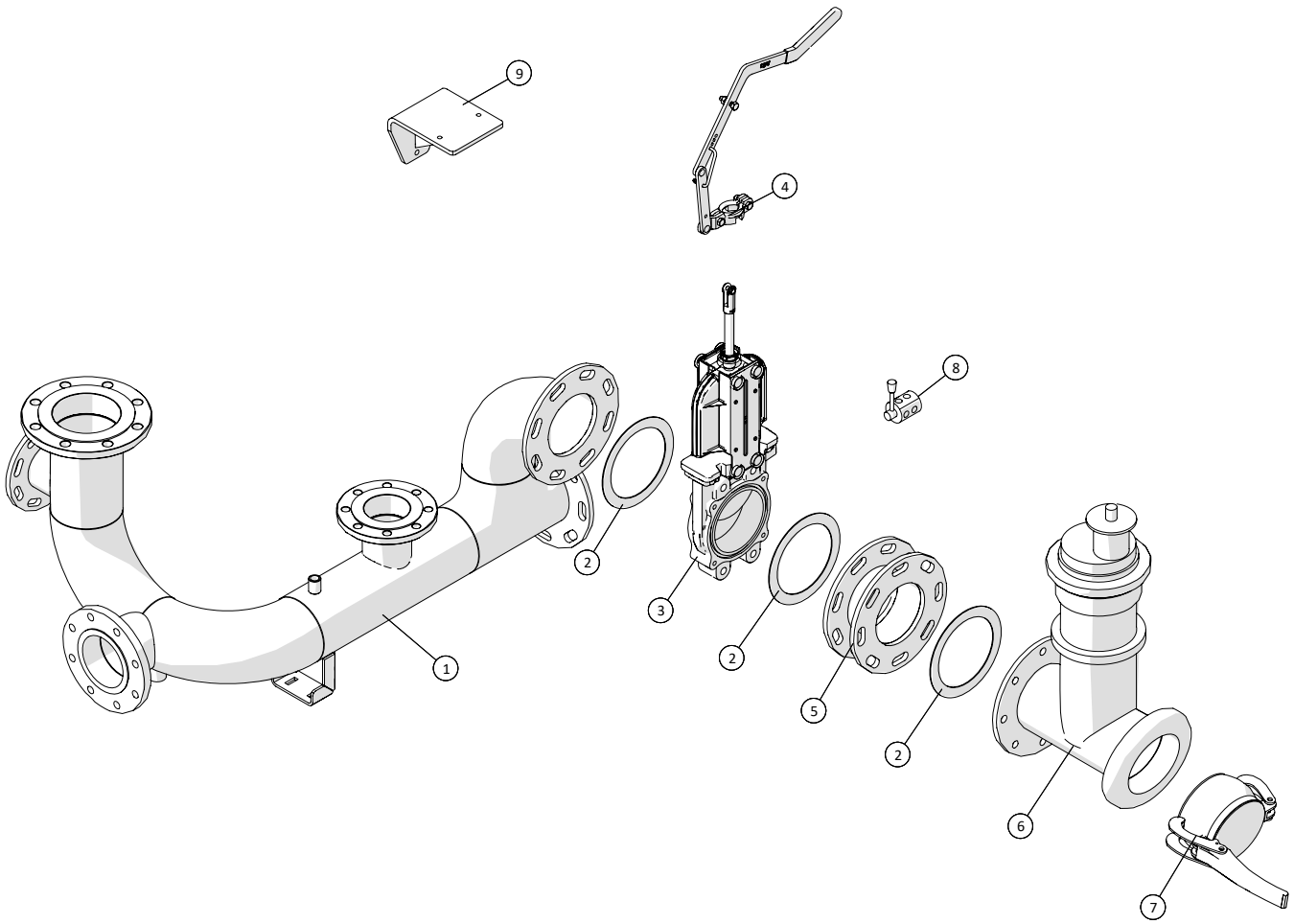

Fælledvej 10 • DK-7200 Grindsted • Tel. +45 76 72 13 00 • Fax +45 76 72 13 98

Pipe system - Self-priming Unit				
Pos. no.	**Item no.**	**Pcs.**	**Description**	**Note**
1	250180763	1	Inlet pipe	
2	13250555	3	Flange gasket NW150 218x169mm	
3	20145154	1	RIV gate-valve w/spindle DN150 6”	
4	20140299	1	Lever with opening stop, RIV model 4/5/6”	
5	250180767	1	Joint by the self-priming unit	
6	23093431610	1	BAUER Self-priming unit	
7	14050125	1	BAUER HK end ball 159mm	
8	25017644	1	6-ways diverter valve 3/8”	
9	250181054	1	Bracket for BAUER Vacuum pump	

Pipe system - Water input

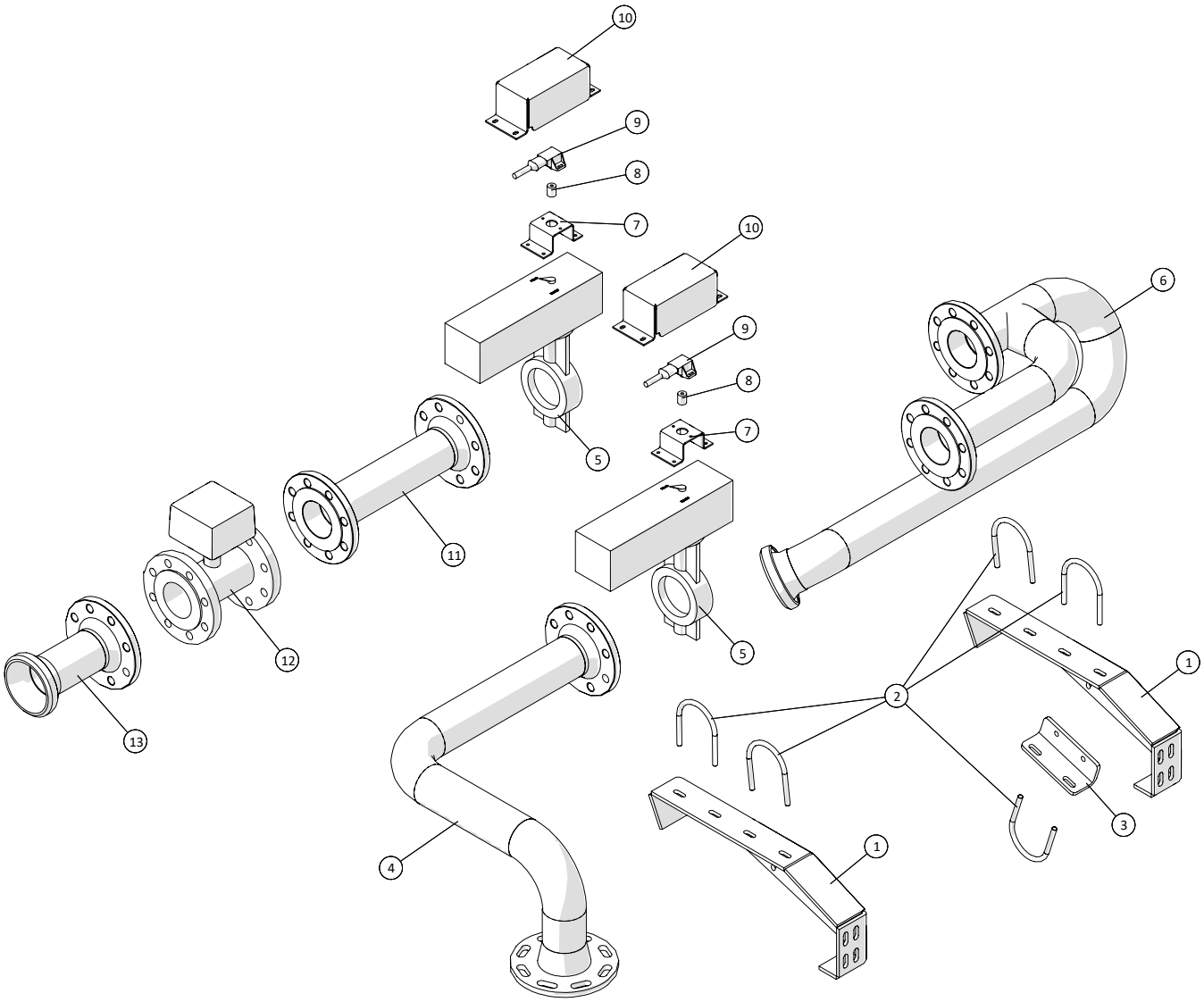

Pipe system - Water input				
Pos. no.	**Item no.**	**Pcs.**	**Description**	**Note**
1	250180973	2	Bracket	
2	10381092	5	Pipe U-clamp Ø92x120	
3	250180975	1	Bracket	
4	250180976	1	Outlet pipe from the water tank	
5	15019009	2	DN80/DA80 engine valve for Program Rain w/ DN80 butterfly + motor actuator	
6	250180977	1	Inlet pipe for water	
7	250180974	2	Bracket	
8	25017561	2	Sensor	
9	25017560	2	Coupling E6C	
10	250180981	2	Cover for angle	
11	250180979	1	Connection pipes for the water	
12	2514850375	1	Flowmeter MAG3100 24V DN80 / 3”	
	25130203-1	1	MAG5000 Signal converter MK1 24Volt	
13	250180978	1	Outlet pipe for turbo filler	

Pipe system - Booster

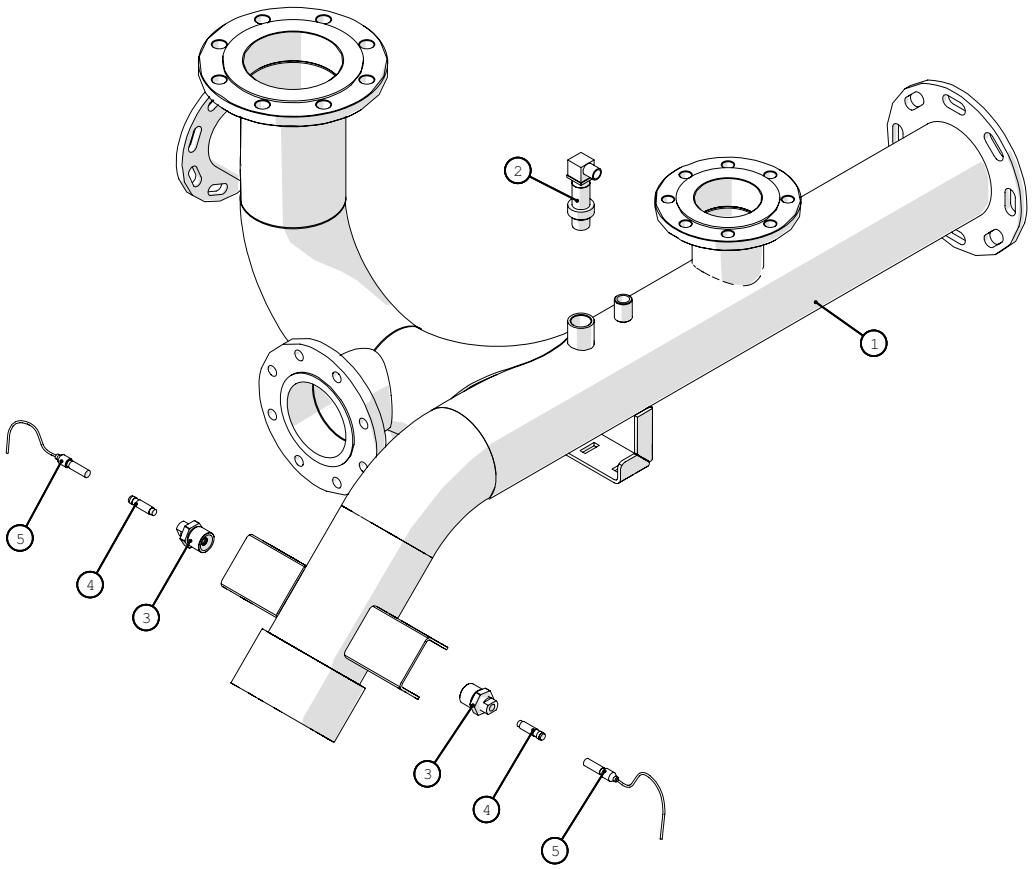

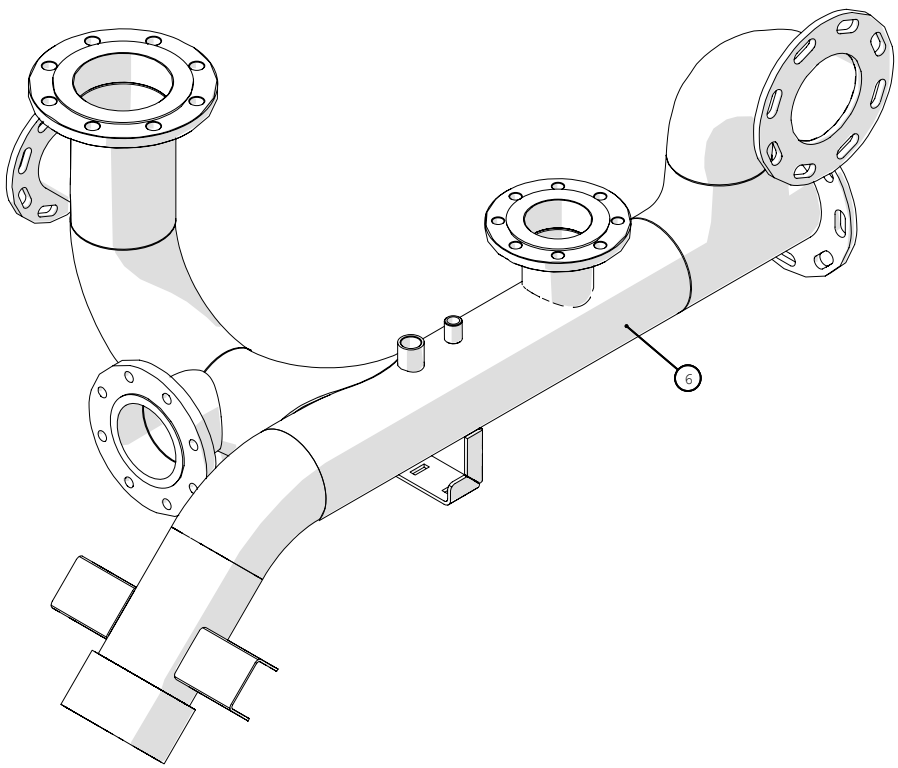

Fælledvej 10 • DK-7200 Grindsted • Tel. +45 76 72 13 00 • Fax +45 76 72 13 98

Pipe system - Booster				
Pos. no.	**Item no.**	**Pcs.**	**Description**	**Note**
1	250181060	1	Inlet pipes with sensor	
2	13180733	1	Pressure transmitter 0-25bar 1”	
3	250179992	2	Sensor Assembly	
4	25030013	2	Inductive sensor - digital	
5	25030011	2	Cable for sensor 3m	
6	250181051	1	Inlet pipes for vacuum with sensor	

Pipe system - Air

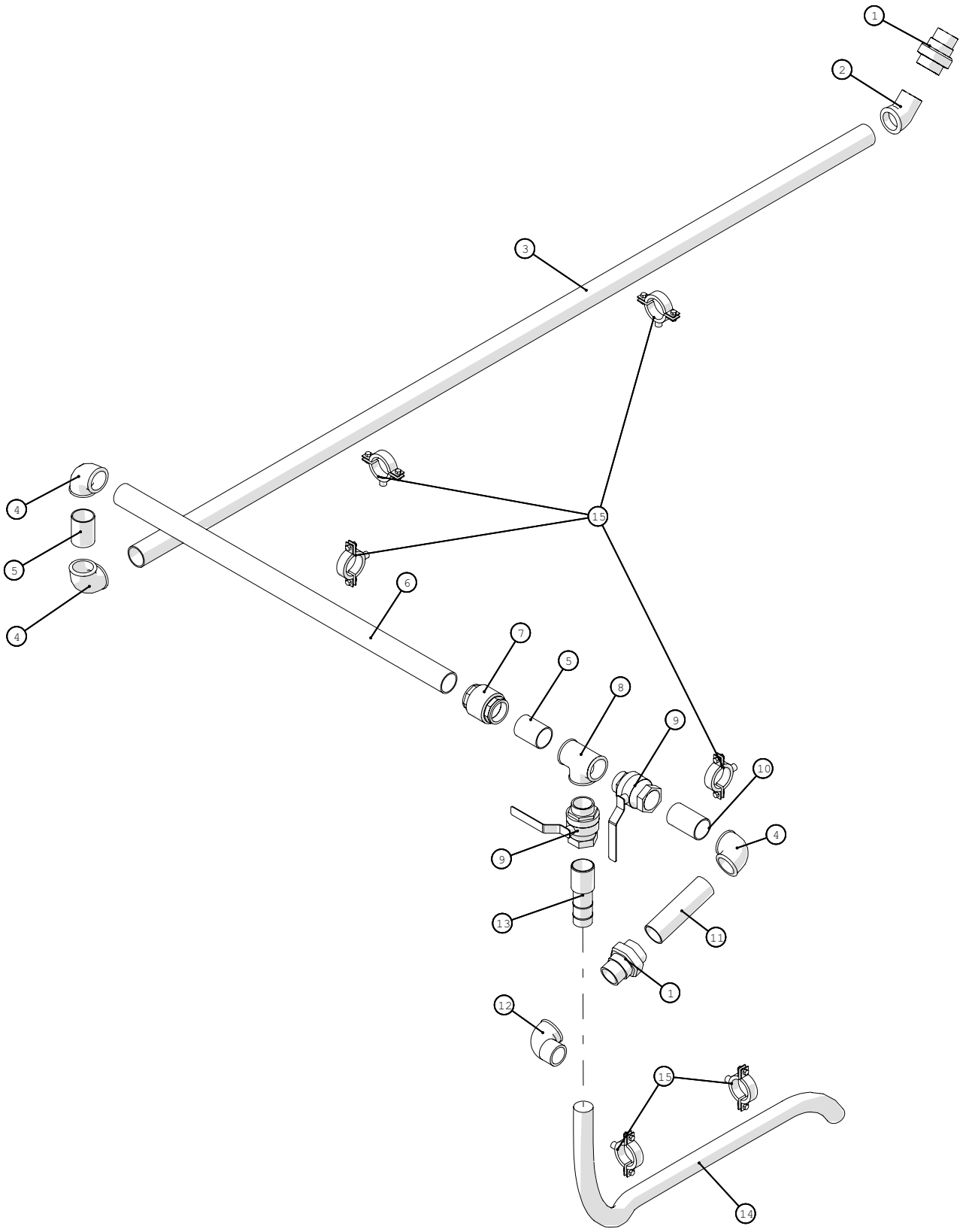

Fælledvej 10 • DK-7200 Grindsted • Tel. +45 76 72 13 00 • Fax +45 76 72 13 98

Pipe system - Air				
Pos. no.	**Item no.**	**Pcs.**	**Description**	**Note**
1	000341412	2	Union No.341 galv. 2”	
2	000121412	1	Elbow 45° No.121 galvanized 2”	
3	250180506	1	Pipe 1 for air	
4	000090412	3	Elbow 90° No.90 galv. 2”	
5	012080412	2	Nipple galv. 2”x80mm	
6	250180509	1	Pipe 3 for air	
7	13031012	1	Valve EUROPA 2”	
8	000130412	1	Tee No.130 galv. 2”	
9	13100074	2	Ball valve female/male 2”	
10	012100412	1	Nipple galv. 2”x100mm	
11	250180507	1	Pipe 2 for air	
12	000092412	1	Elbow 90° No.92 galv. 2”	
13	14380045	1	Hose pipe w/BSP 2”x50mm	
14	16010096	1,5m	Clear hose w/steel coil 51mm	
15	10380494	6	Clamp galv. 58-64mm	

Water Tank

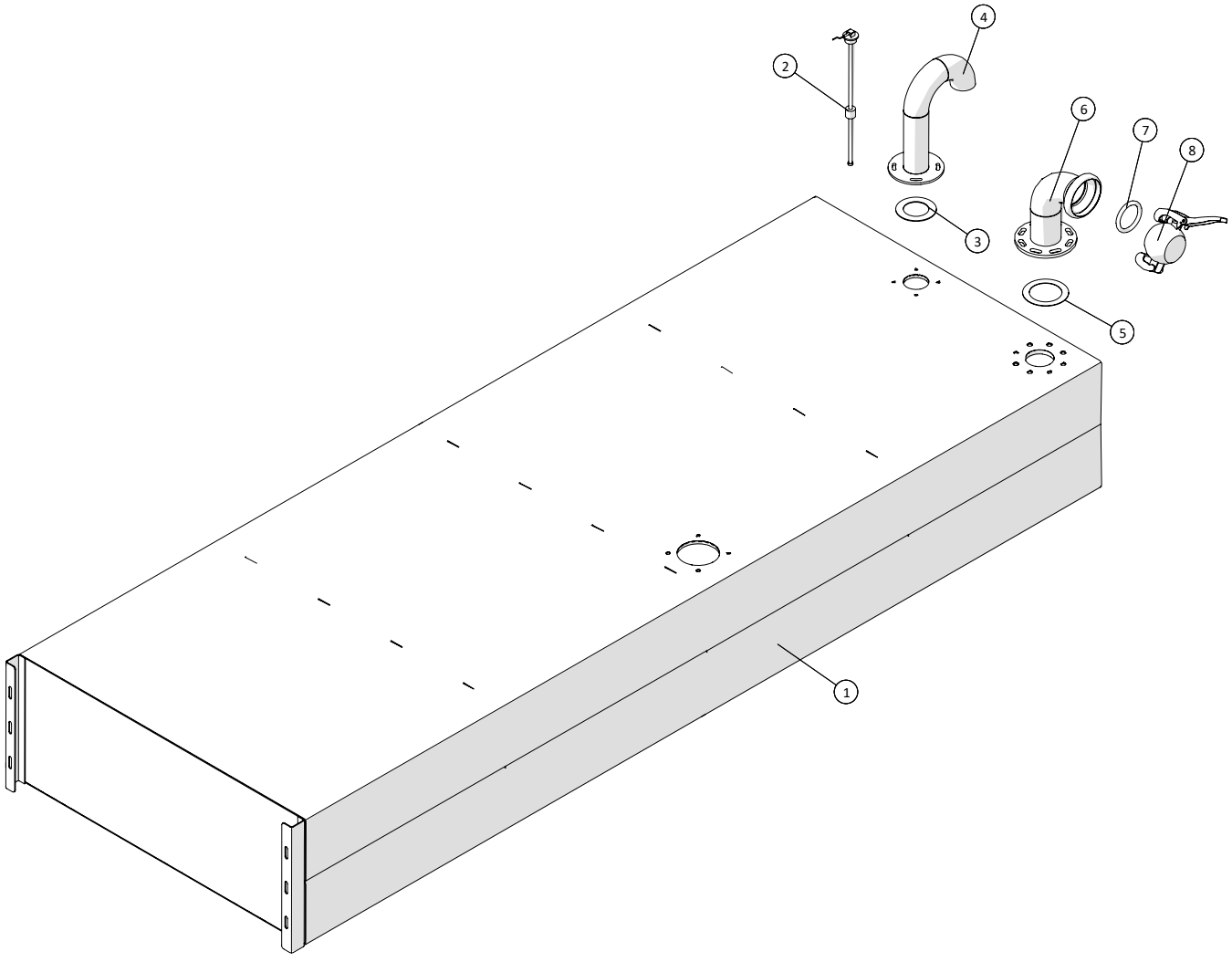

Fælledvej 10 • DK-7200 Grindsted • Tel. +45 76 72 13 00 • Fax +45 76 72 13 98

Water Tank				
Pos. no.	**Item no.**	**Pcs.**	**Description**	**Note**
1	250181350	1	Water Tank	
2	25017058	1	Sensor for water tank 55cm	
3	13250541	1	Fiber Seal NW80 142x90mm (3mm)	
4	250180136	1	breather	
5	13250546	1	Fiber Gasket NW100 162x115mm (3mm)	
6	250180284	1	Inlet pipe for water tank	
7	14050043	1	BAUER HK Rubber sealing ring S4	
8	14050123	1	BAUER HK End ball 108mm	

Water Tank - with buffer tank

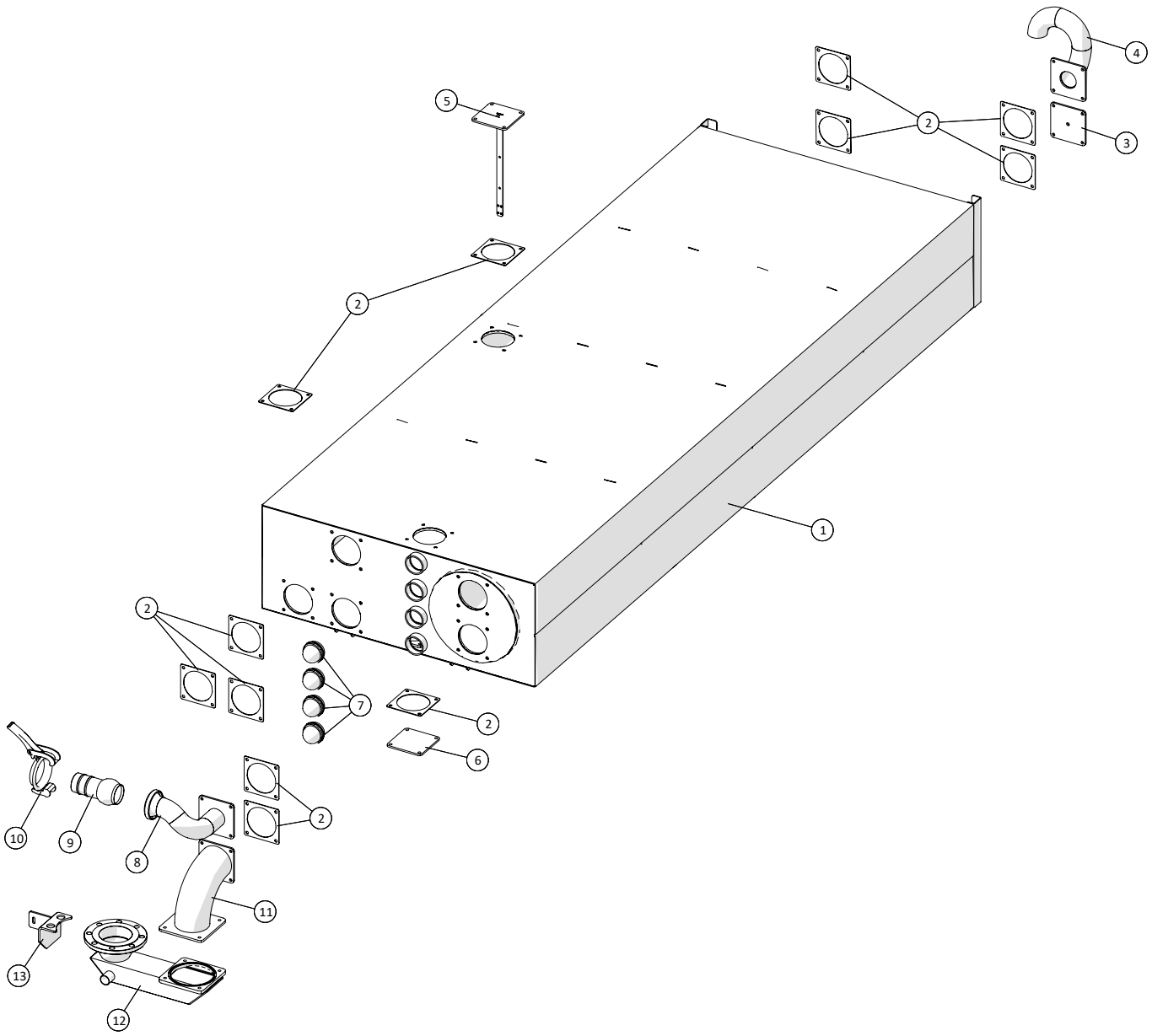

Water Tank - with buffer tank				
Pos. no.	**Item no.**	**Pcs.**	**Description**	**Note**
1	250181160	1	Stainless steel water tank with buffer tank for slurry	
2	20140715	12	MZ rubber seal 4”, 5”, 6”	
3	250181313	1	MZ flange for level sensor cable	
4	250181192	1	Ventilation for water tank	
5	250181310	1	Bracket for level sensor in the slurry tank	
6	20140725	1	MZ blankin flange 4”, 5”, 6”	
7	210434563540	4	Inspection glass	
8	250181193	1	Inlet	
9	14050371-01	1	Hose nipple with ball coupling	
10	14050012	1	Lever closure ring	
11	250181190	1	Elbow	
12	250180376	1	Outlet	
13	250181316	1	Support bracket	

Diesel Tank

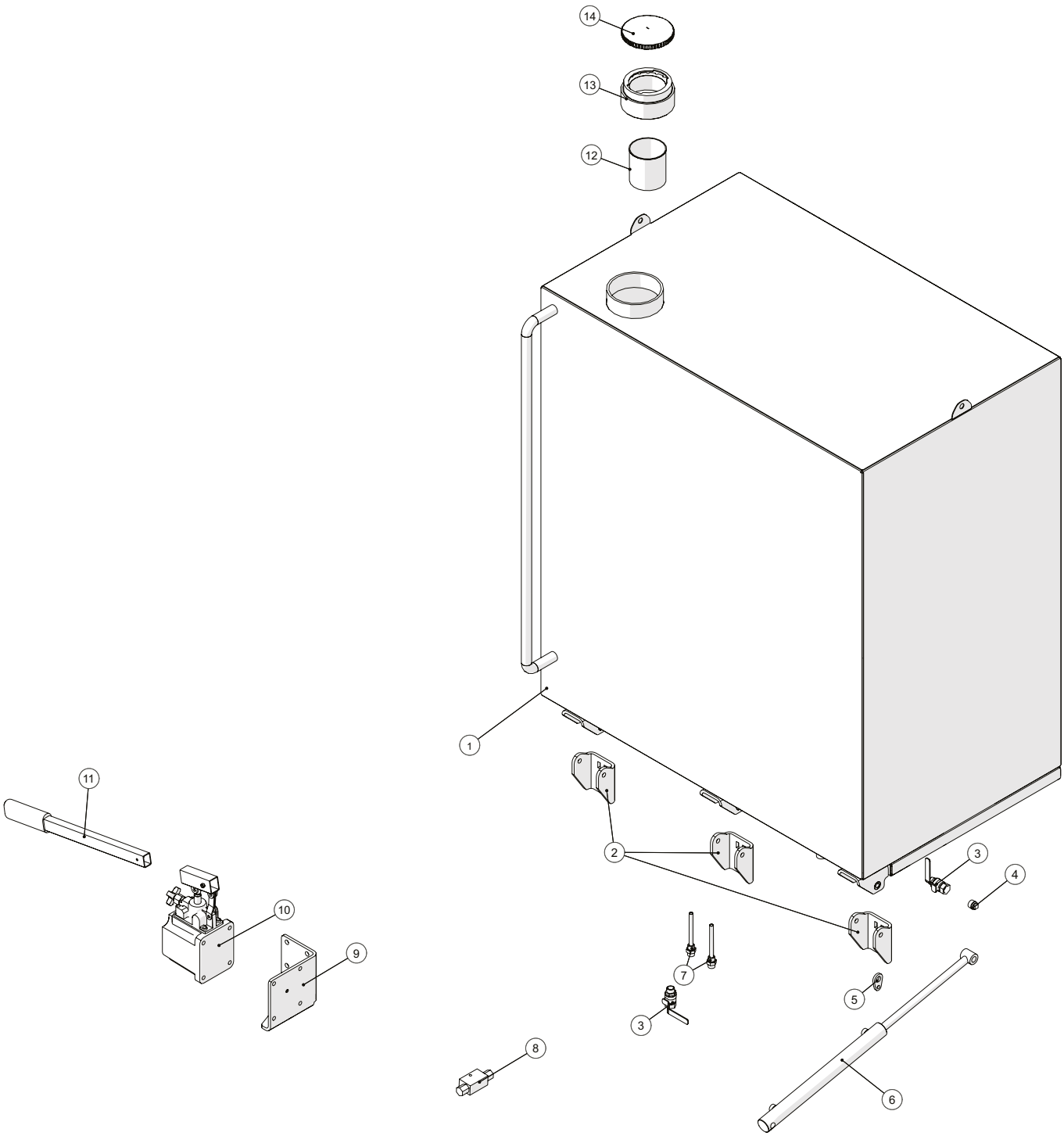

Fælledvej 10 • DK-7200 Grindsted • Tel. +45 76 72 13 00 • Fax +45 76 72 13 98

Diesel Tank				
Pos. no.	**Item no.**	**Pcs.**	**Description**	**Note**
1	250181130	1	Diesel tank stainless steel	
2	250180129	3	Bracket for tank	
3	13100064	2	Ball valve female/male ½”	
4	000291404	1	Plug No.291 galv. ½”	
5	250180679	1	Eye for safety wire	
6	250180132	1	Cylinder	
	250180132-1		Seal kits	
7	250180816	2	Diesel nozzle inlet/return	
8	25017185	1	Double locking valve ¼” VBPDE	
9	250180672	1	Bracket for pump	
10	25017048	1	Hand pump PMI12 + tank	
11	25017049	1	Lever for pump	
12	250180732	1	Strainer for 100mm collar	
13	250180733	1	Tank Flange for strainer	
14	25017651	1	Fuel cap Ø135	

Hydraulic

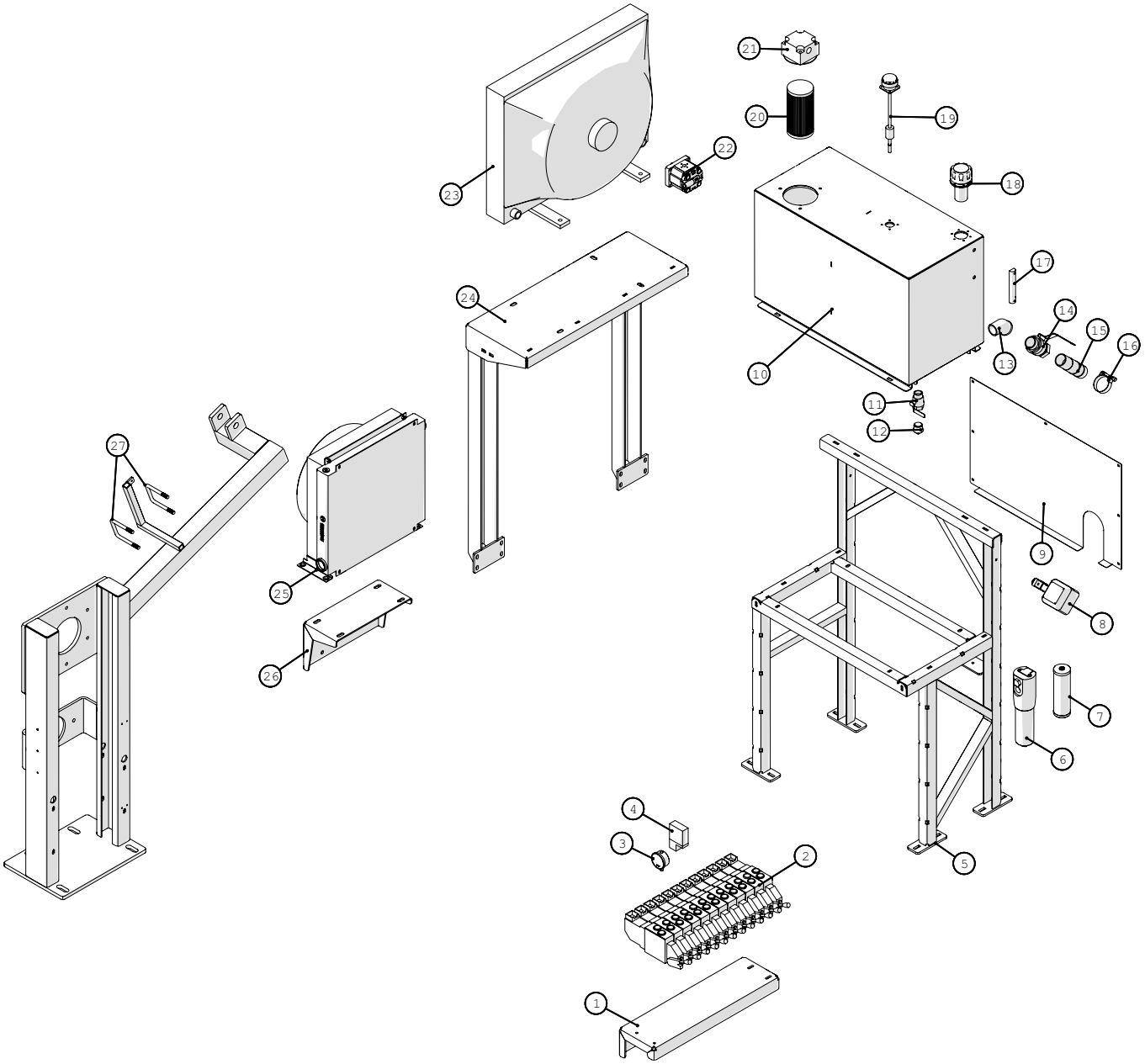

Fælledvej 10 • DK-7200 Grindsted • Tel. +45 76 72 13 00 • Fax +45 76 72 13 98

Hydraulic				
Pos. no.	**Item no.**	**Pcs.**	**Description**	**Note**
1	250180200	1	Bracket for hydraulic control	
2	136311074181	1	12 slice PVG block	
3	1362SPG063250SB	1	Pressure gauge 0-250bar w/glycerin ¼”	
4	1362XMLA300D1S11	1	Pressure switch 20-300 BAR wo/scale	
5	250181248	1	Bracket for hydraulic tank	
6	25017180	1	High pressure filter 90LPM ¾” A10MY	
7	25017180-01	1	Return filter element	
8	2514861061	1	Work lamp	
9	250181257	1	Heat shield for hydraulic tank	
10	250181254	1	Hydraulic Tank	
11	13100068	1	Ball valve female/male 1”	
12	000291408	1	Plug No.291 galv. 1”	
13	000121111	1	Angle 45° No.121 Black 1½”	
14	13100072	1	Ball valve female/male 1½”	
15	2501790248	1	Suction nozzle for hydraulic tank	
16	16200716	1	Clamp 60-63mm	
17	25017205	1	Oil Level Gauges 127/M12 TEMP MP	
18	21201065	1	Lid w/10my filter	
19	2514851239	1	Fuel gauge	
20	25017005	1	Filter element	
21	25017190	1	Return filter 185LPM 1¼”	
22	13631212058400	1	Radiator for compressor	
23	250180399	1	Radiator HPA36 2PAS	
24	250181293	1	Bracket for oil cooler	
25	2514702297	1	Air/Oil cooler MG-AIR 2040K DC24V	
26	250181043	1	Bracket for oil cooler	
27	151377801073	2	Clamp	

Radiator - Tier 3A

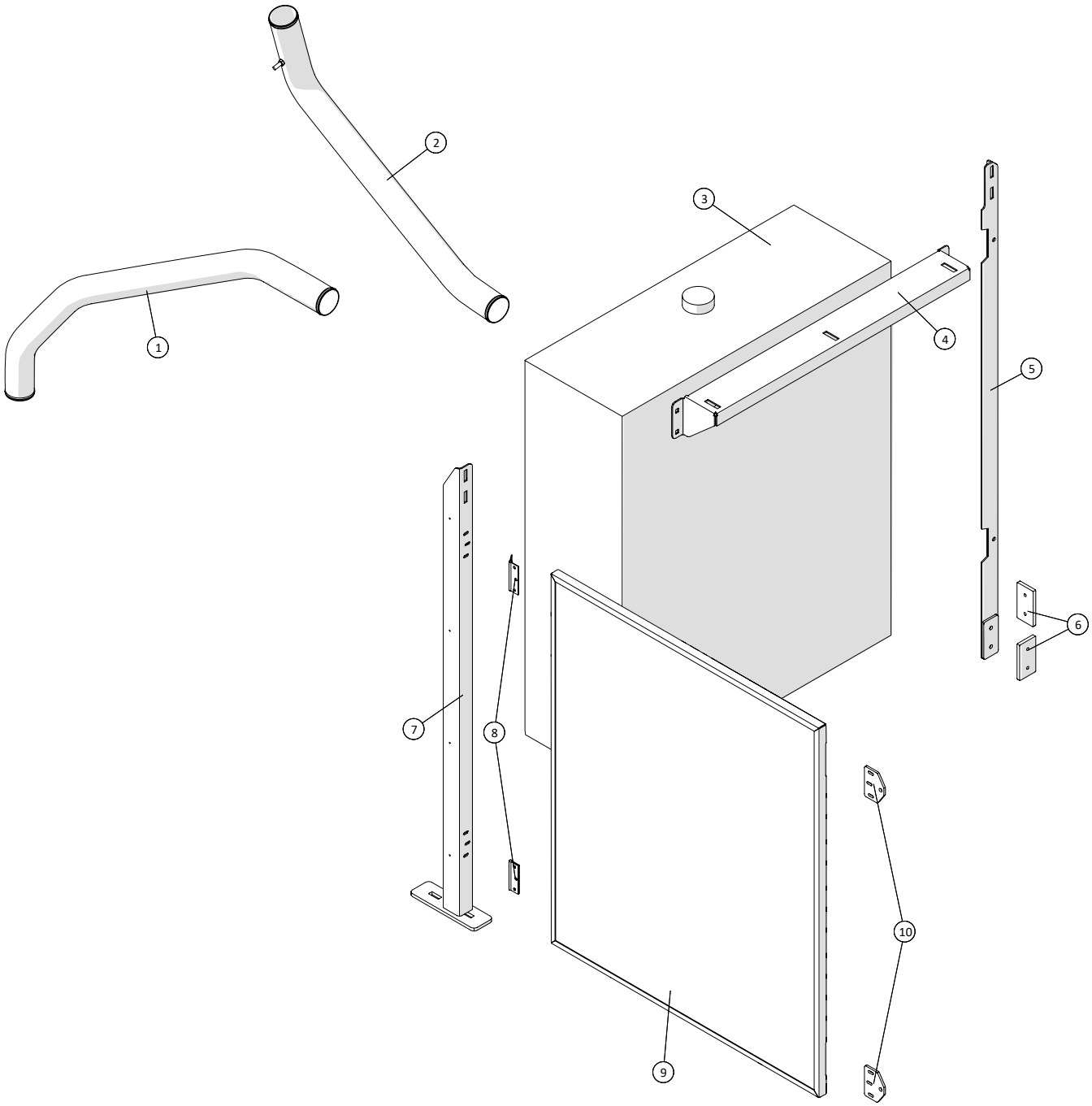

Fælledvej 10 • DK-7200 Grindsted • Tel. +45 76 72 13 00 • Fax +45 76 72 13 98

Radiator - Tier 3A				
Pos. no.	**Item no.**	**Pcs.**	**Description**	**Note**
1	250180774	1	Outlet pipe from intercooler	
2	250180824	1	Inlet pipe for intercooler	
3	25016W031-1		Radiator HPA36 2PAS	
4	250180253	1	Front crossbar for roof suspension	
5	250180803	1	Bracket 1	
6	250180215	2	Bracket with thread. holes	
7	250180805	1	Bracket 2	
8	1513820114	2	Hinge	
9	250180807	1	Framework for grille	
10	250180809	2	Sealing plate for radiator grille	
	25016W031	1	Cooling Package	Incl. Pos. no. 1, 2 and 3

Radiator - Tier 3B

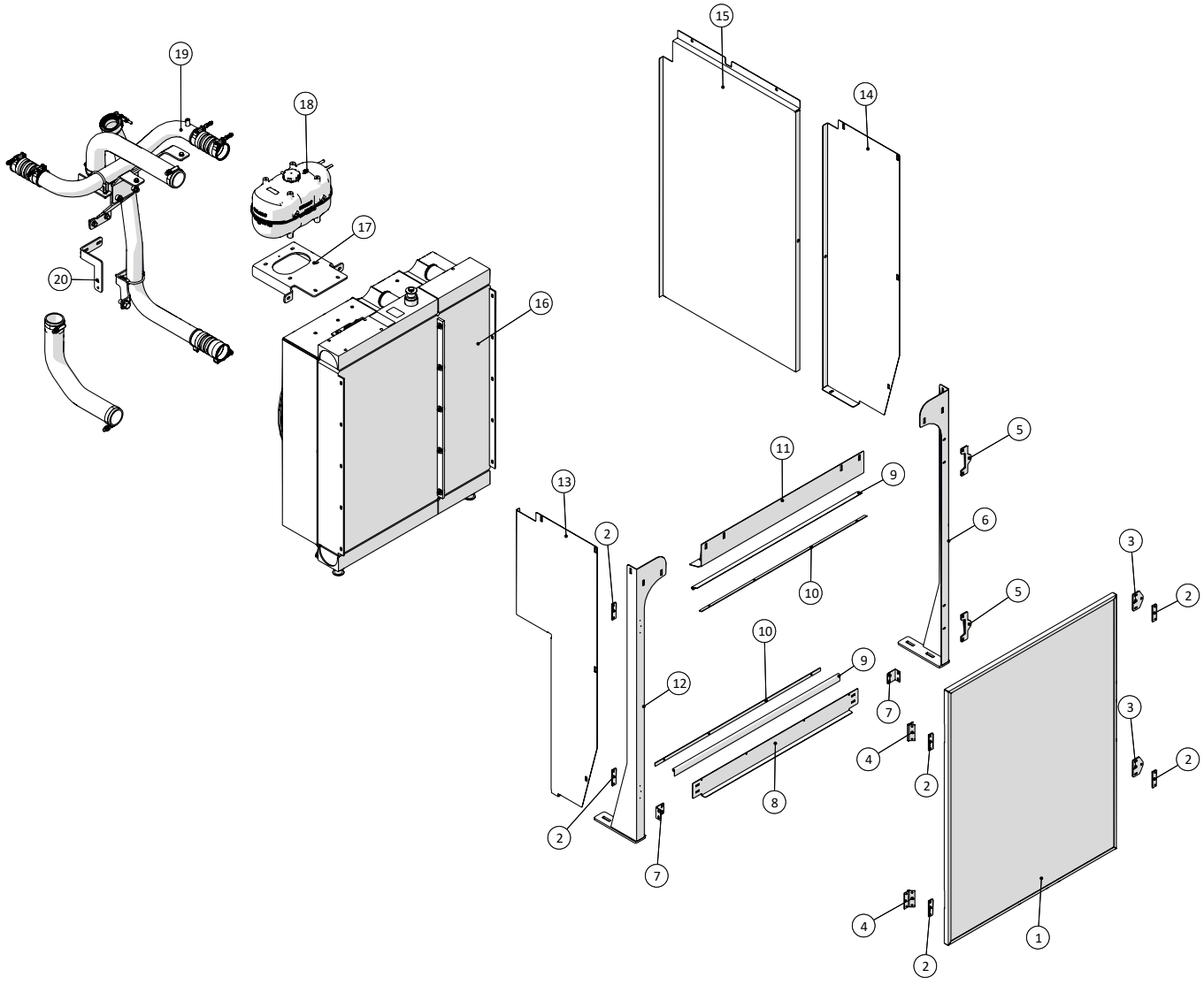

Fælledvej 10 • DK-7200 Grindsted • Tel. +45 76 72 13 00 • Fax +45 76 72 13 98

Radiator - Tier 3B				
Pos. no.	**Item no.**	**Pcs.**	**Description**	**Note**
1	250181238	1	Grille	
2	250181006	6	Monting plate for hinge	
3	250180809	2	Sealing plate for radiator grille	
4	1513820114	2	Hinge	
5	250181242	2	Fastening plate	
6	250181235	1	Support backet	
7	250181398	2	Angle bracket	
8	250181348	1	Cover 2	
9	250181394	2	Rubber seal	
10	250181397	2	Mounting plate	
11	250181346	1	Cover	
12	250181227	1	Support backet	
13	250181396	1	Side cover 3	
14	250181395	1	Side cover 2	
15	250181347	1	Side cover 1	
16		1	Radiator	
17		1	Bracket	
18		1	Container	
19		1	Pipes	
20	250181222	1	Bracket for pipe for the turbo	

Engine - Tier 3B

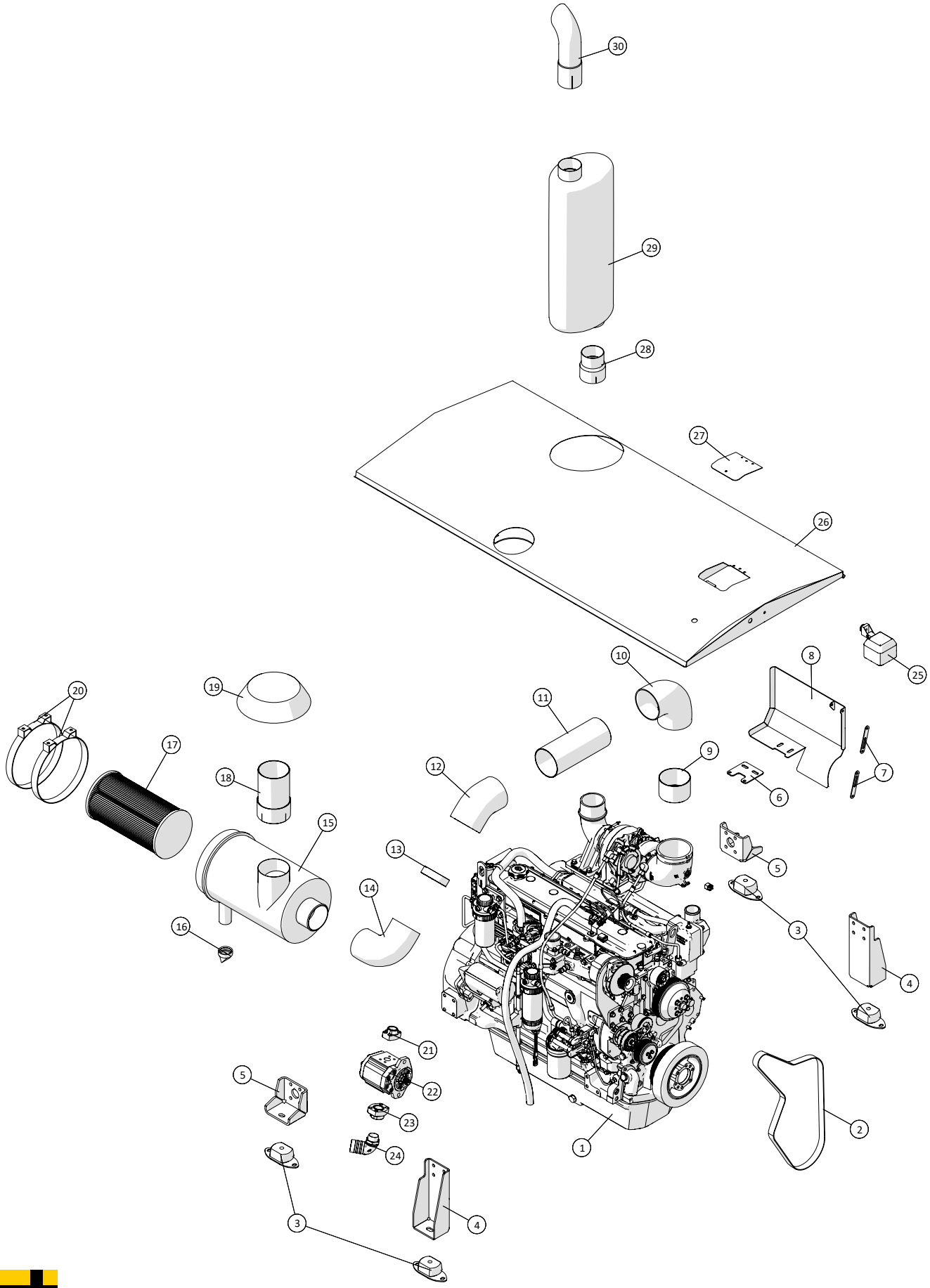

Engine - Tier 3A				
Pos. no.	**Item no.**	**Pcs.**	**Description**	**Note**
1	25010060-1	1	Engine	
2	2501R135592	1	Fan belt	
3	25017055	4	Vibration absorber SIM200B-60 shore	
4	250180755	2	Engine suspension	
5	250180044	2	Engine suspension	
6	250180402	1	Bracket for heat shield	
7	250180403	2	Mounting bracket for heat shield	
8	250180685	1	Heat Shield	
9	250180406	1	Pipe 2 for intake	
10	2514850422	1	Elbow for inlet 90° 127mm	
11	250180405	1	Pipe 1 for intake	
12	2514850421	1	Elbow for inlet 45°	
13	250180407	1	Pipe 3 for intake	
14	250180394	1	Rubber elbow 90° 114mm	
15		1	Air Filter	
16	2514853840	1	Air filter vacuator valve	
17	2501G110382	1	Air Filter	
18	250180594	1	Pipe for intake	
19	250180393	1	Rain Cap 127mm	
20	2501P004079	2	Clamp	
21	2514851507	1	Flange SAE 3000PSI 1”	
22	1363111250150A	1	Gear pump SNP 044 SAE	
23	1363YFA03728U	1	Flange 210BAR 3000PSI 1¼”	
24	9034616	1	Elbow 90° 1¼” union X 2” hose connector	
25	2514861061	1	Work lamp	
26	250180247	1	Roof	
27	250180417	1	Lid for coolant	
28	250180420	1	Transition nozzle for exhaust	
29	250180400	1	Exhaust	
30	25017374	1	Outlet pipe	

Engine - Tier 3B

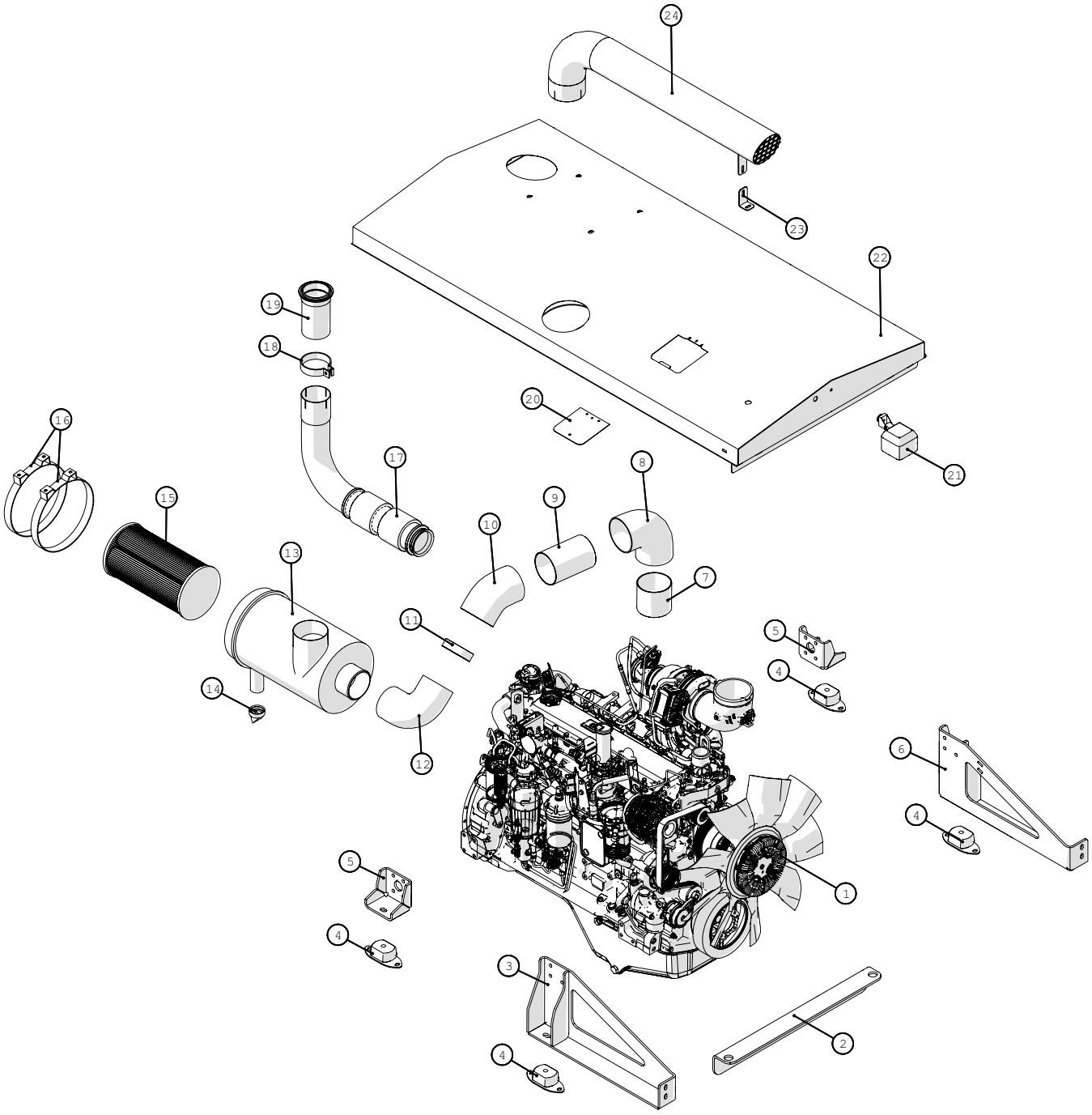

Engine - Tier 3B				
Pos. no.	**Item no.**	**Pcs.**	**Description**	**Note**
1		1	Engine	
2	250181216	1	Cross brace for radiator bracket	
3	250181218	1	Suspension right-side	
4	25017055	4	Vibration absorber SIM200B-60 shore	
5	250180044	2	Engine suspension	
6	250181221	1	Suspension left-side	
7	250181223	1	Pipe 2 for intake	
8	2514850422	1	Elbow for inlet 90° 127mm	
9	250181245	1	Pipe 1 for intake	
10	2514850421	1	Elbow for inlet 45°	
11	250180407	1	Pipe 3 for intake	
12	250180394	1	Rubber elbow 90° 114mm	
13		1	Air filter for 225hp tier 3 engine	
14	2514853840	1	Air filter vacuator valve	
15	2501G110382	1	Air Filter	
16		2	Bracket for air filter 225hp tier 3	
17	250181295	1	Exhaust	
18		1	Exhaust clamps	
19	250181296	1	Pipe for exhaust	
20	250181278	1	Lid for antifreeze	
21	2514861061	1	Work lamp	
22	250181230	1	Roof	
23	250181402	1	Bracket for intake	
24	250181345	1	Intake for Tier 3B	

Exhaust Filter - Tier 3B

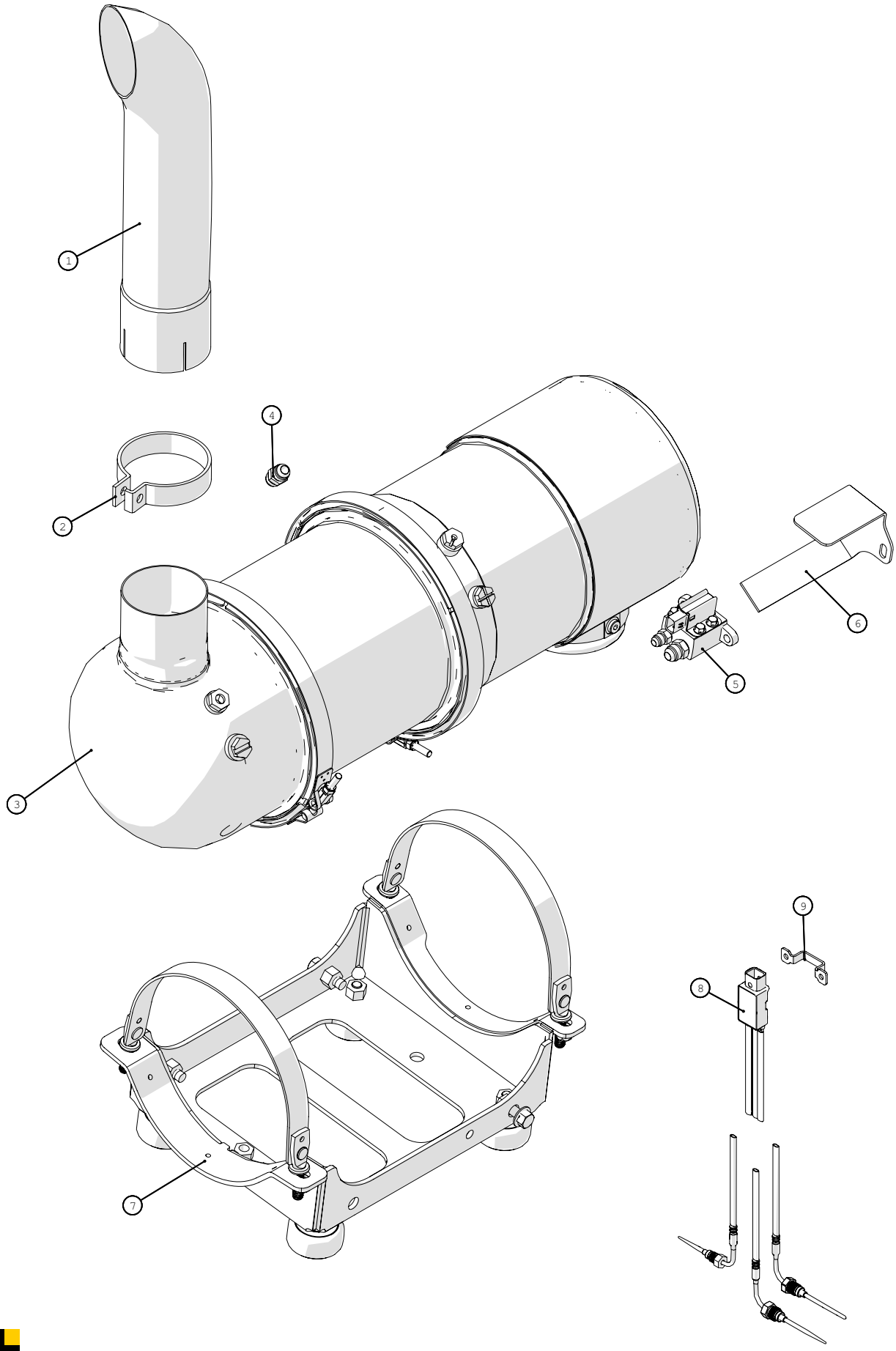

Fælledvej 10 • DK-7200 Grindsted • Tel. +45 76 72 13 00 • Fax +45 76 72 13 98

Exhaust Filter - Tier 3B				
Pos. no.	**Item no.**	**Pcs.**	**Description**	**Note**
1		1	Outlet pipes	
2		1	Clamp	
3		1	Particulate Filter	
4		1	Fitting	
5		1	Delta P sensor	
6	250181403	1	Bracket for valve at exhaust filter TIER3B	
7		1	Brackets for particulate filter	
8		1	Sensor unit	
9		1	Bracket for sensor unit	

Compressor

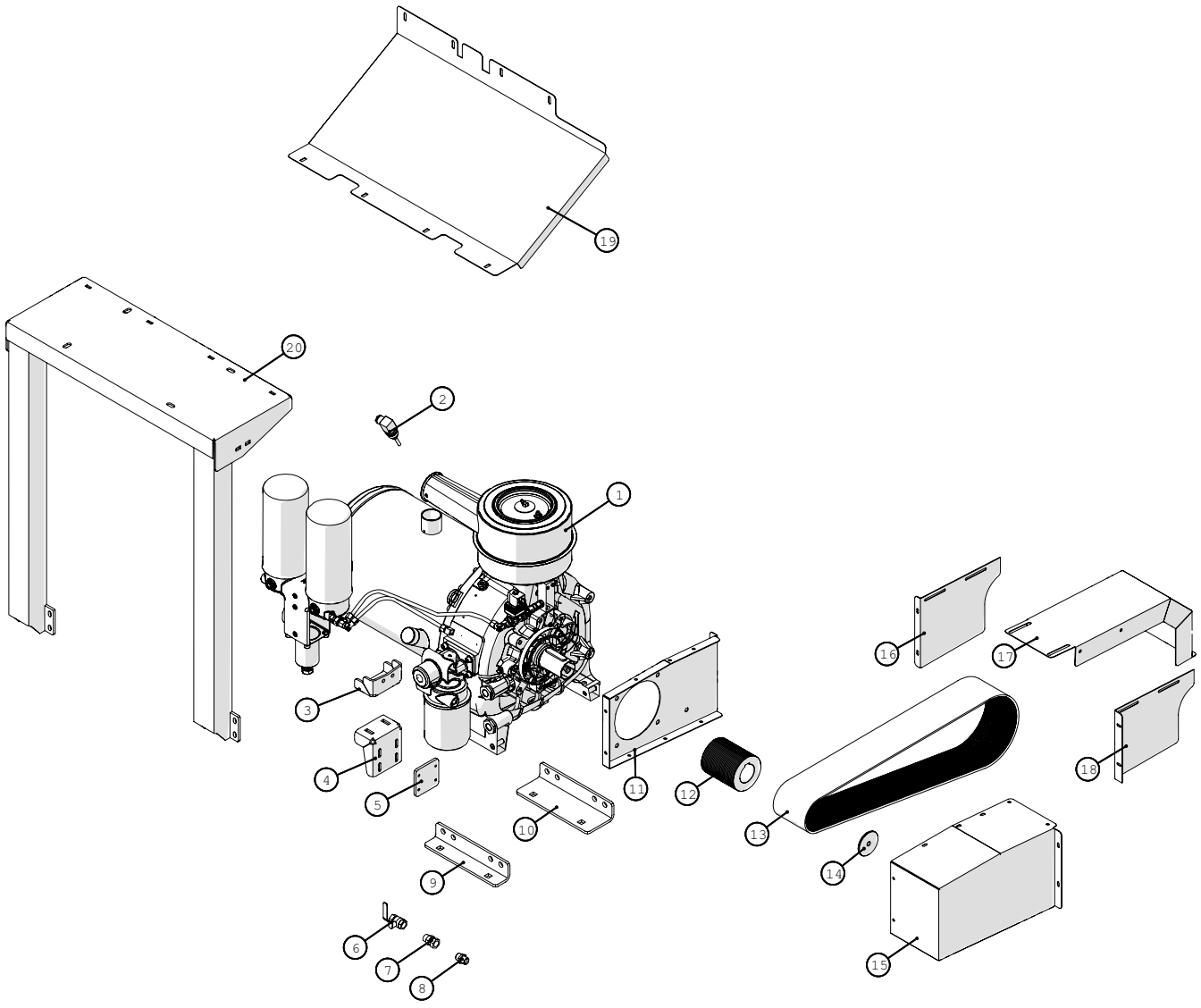

Fælledvej 10 • DK-7200 Grindsted • Tel. +45 76 72 13 00 • Fax +45 76 72 13 98

Compressor				
Pos. no.	**Item no.**	**Pcs.**	**Description**	**Note**
1	25030505	1	Compressor NK200	
2	136308Z4035	1	Temperature sensor	
3	250180489	1	Bracket 2 for rear of compressor	
4	250180488	1	Bracket 1 for rear of compressor	
5	250180084	1	Mounting plate	
6	13708012	1	Ball valve dual stainless steel ½”	
7	5050108053	1	High pressure nipple union ½”	
8	50501003	1	High pressure Adaptor ½”	
9	250180469	1	Bracket for compressor	
10	250180470	1	Bracket 2 for compressor	
11	250180307	1	Protective shield for compressor	
12	250180522	1	Poly-V pulley ø114,7mm 28 ribs PL	
13	250180520	1	Poly-V belt 28 ribs 1981	
14	250180512	1	Bushing for complete Poly-V pulley	
15	250180498	1	Protective shield for compressor	
16	250180310	1	Protective shield 4 compressor	
17	250180308	1	Protective shield 2 compressor	
18	250180309	1	Protective shield 3 for compressor	
19	250181272	1	Cover	
20	250181293	1	Bracket for oil cooler	

Coupling

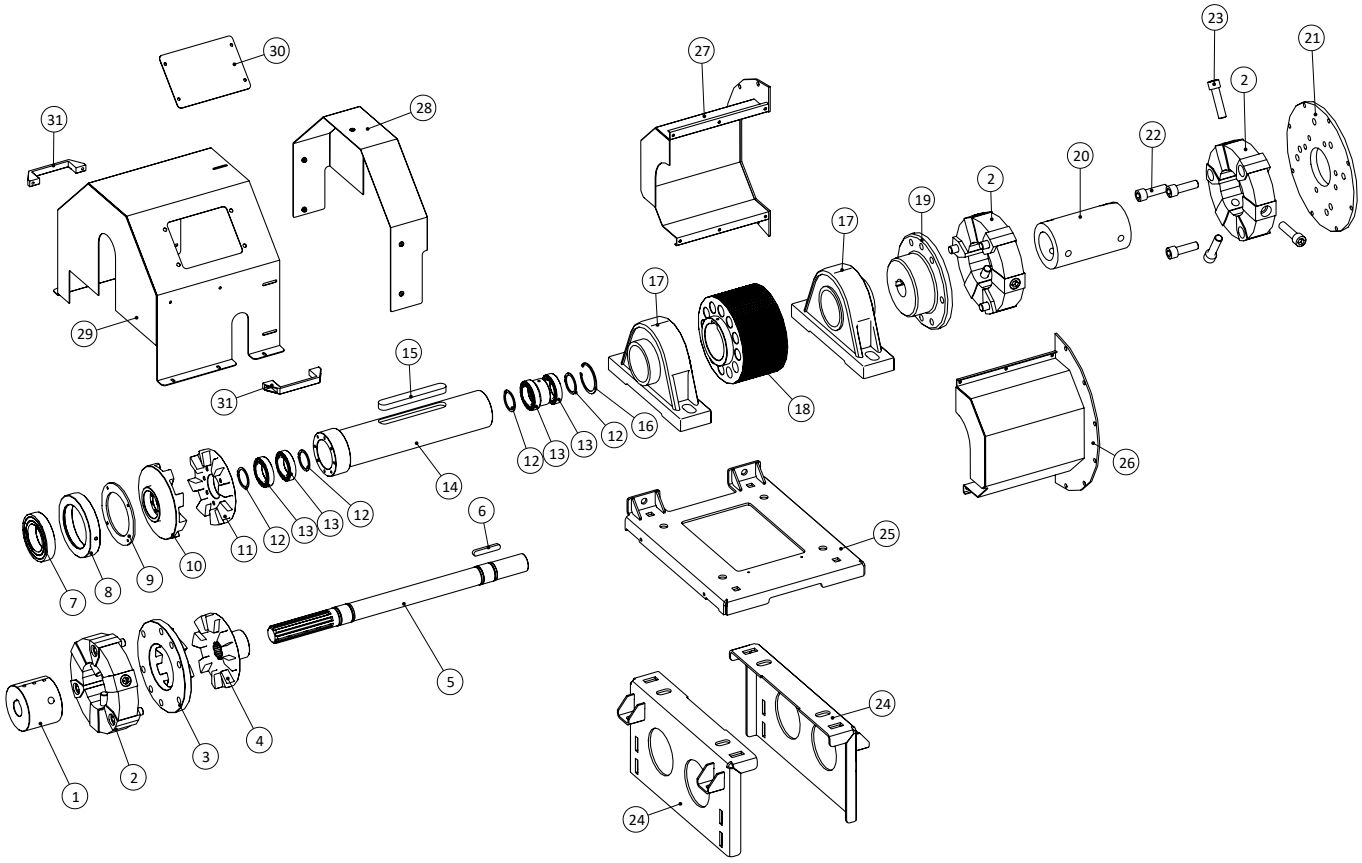

30
31
28
27
23
21
2
22
20
2
19
17
17
29
15
31
18
16
12
13
13
12
14
26
6
25
11
12
13
13
12
10
9
8
7
5
24
4
3
2
1
24

Coupling				
Pos. no.	**Item no.**	**Pcs.**	**Description**	**Note**
1	250180004	1	Shaft fastening on pump	
2	25030062	3	CENTAFLEX element A90 incl. bolts	
3	250180003	1	Coupling part for pump connection and housing	
4	250180006	1	Coupling part for pump connection	
5	250180005	1	Shaft for pump	
6	15140038014080	1	Key A14x9x80	
7	19300621502	1	Ball bearing	
8	250180010	1	Bracket for clutch bearing	
9	250180011	1	Plate for clutch bearing	
10	250180007	1	Coupling part	
11	250180008	1	Coupling part	
12	210422220019	4	Retaining ring A50	
13	19300601002	4	Ball bearing	
14	250180009	1	Shaft for compressor	
15	250180358	1	Parallel key A28x16x200	
16	15110616087	1	Retaining ring J80x2, 5	
17	19320100	2	Plummer block bearing	
18	250180521	1	Poly-V Pulley	
19	25030066	1	CENTAFLEX hub A90 Ø48mm	
20	25030064	1	Central pipe A90	
21	25030063	1	CENTAFLEX plate A90	
22	25030068	9	Cylinder screw M20x65	
23	25030069	9	Cylinder screw M20x80	
24	250180053	2	Bracket for bearing assembly	
25	250180055	1	Base plate for bearing assembly	
26	250180695	1	Housing	
27	250180699	1	Housing	
28	250180624	1	Shield 2	
29	250180619	1	Shield	
30	250181074	1	Inspection Hatch	
31	2514803066	2	Handle	

Gear shifting function

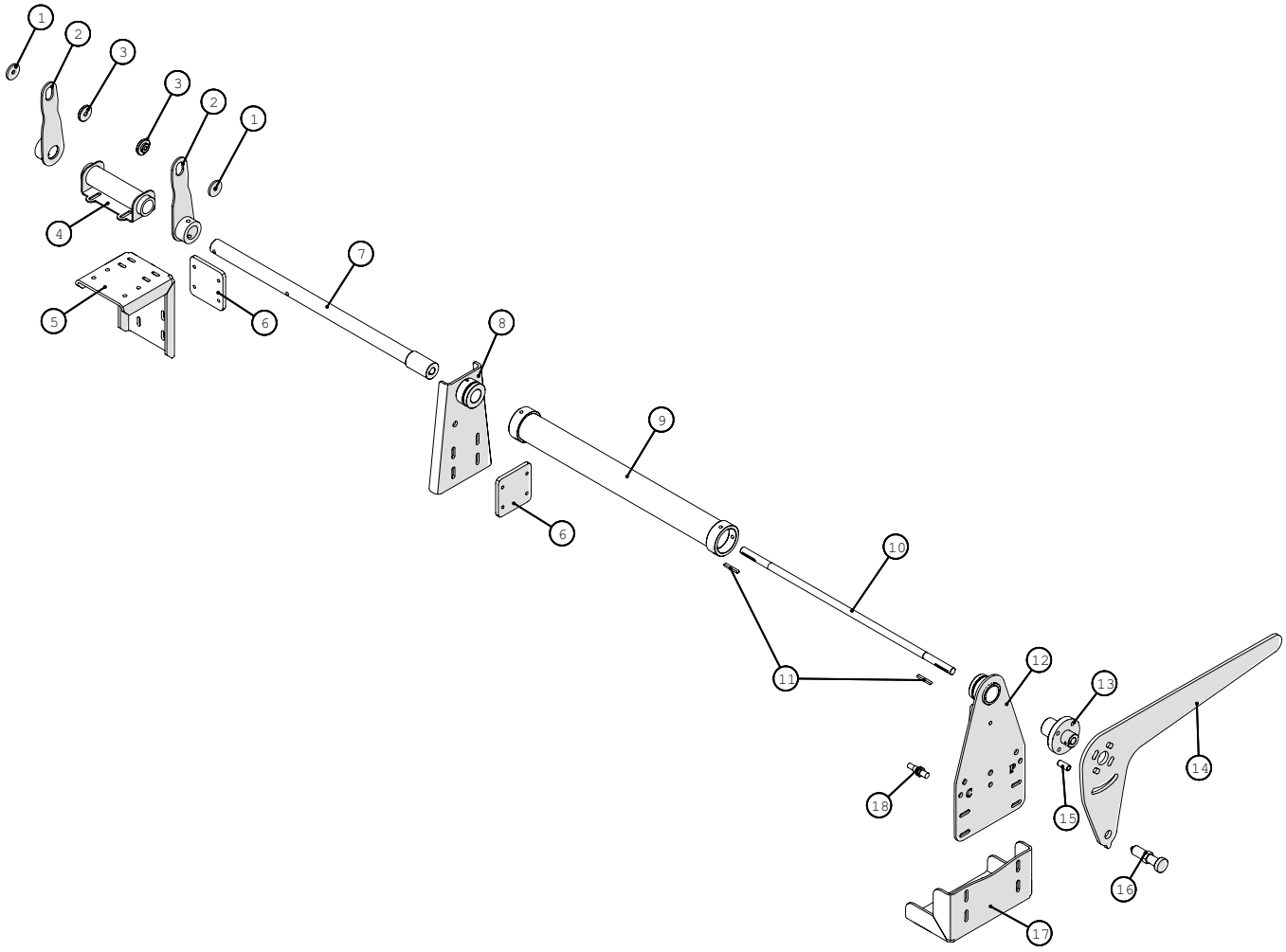

Gear shifting function				
Pos. no.	**Item no.**	**Pcs.**	**Description**	**Note**
1	250180086	2	Washer for switch arm	
2	250181070	2	Switch arm	
3	250180012	2	Spacer	
4	250181075	1	Bearing	
5	250180083	1	Bracket for switch system	
6	250180084	2	Mounting plate	
7	250181067	1	Shaft	
8	250181078	1	Plate for switch arm	
9	250181303	1	Spacer	
10	250180577	1	Spring	
11	15140038005040	2	Parallel key A5x5x40	
12	250181300	1	Bracket for switch system	
13	250181071	1	Bushing	
14	250181072	1	Trigger arm	
15	250181066	1	Spacer	
16	250120151008	1	Spring latch	
17	250180566	1	Bracket 2 for switch system	
18	25030010	1	Inductive sensor	

Chassis

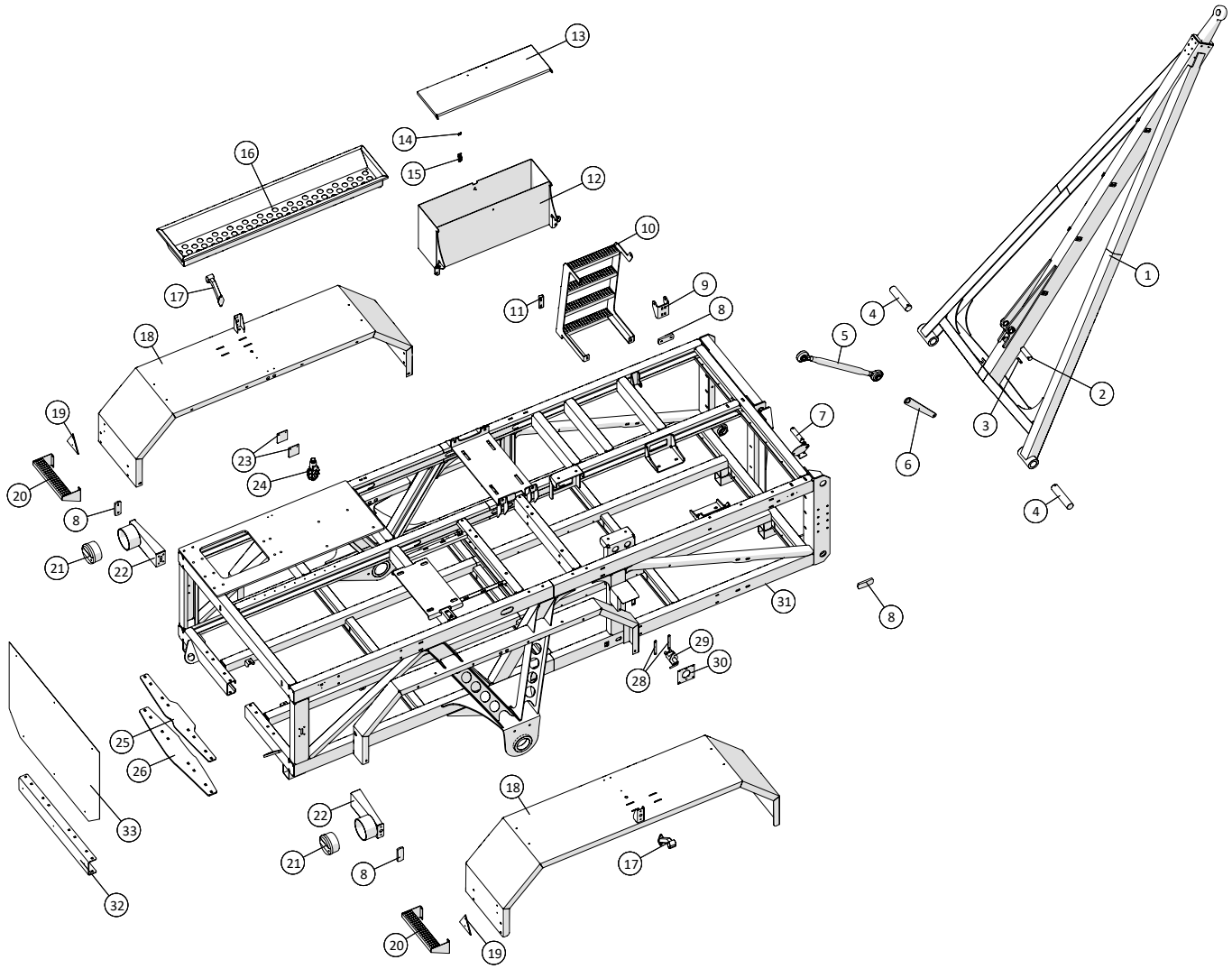
1
2
3
4
5
6
7
8
9
10
11
12
13
14
15
16
17
18
19
20
21
22
23
24
25
26
28
29
30
31
32
33

Chassis				
Pos. no.	**Item no.**	**Pcs.**	**Description**	**Note**
1	250180790	1	Reinforced drawbar	
2	250180353	1	Pin 2 of the top link	
3	250180529	1	Pin of drawbar hook	
4	250180337	2	Pin of drawbar	
5	25017251	1	Top link	
6	250180273	1	Bracket for drawbar	
7	250180352	1	Pin for top link	
8	1229140053	4	Side marker yellow LED	
9	250180129	1	Bracket for tank on frame	
10	250180531	1	Ladder	
11	250180534	1	Brackets for ladder	
12	250180290	1	Toolbox	
13	250180293	1	Lid for toolbox	
14	122500042	1	Hook	
15	122500041	1	Lock	
16	250180553	1	Toolbox	
17	1229140072	1	End outline marker left	
18	250180497	2	Mudguard w/bracket	
19	210434566501	2	Red triangular reflex	
20	250180673	2	Step	
21	1229140075	2	Tail light Stop / blink	
22	250180199	2	Bracket for tail light	
23	250180589	2	Bracket for 6-way valve	
24	25017645	1	6-way valve 24Volt 3/8”	
	25017645-1	1	Coil 24Volt	
25	250180386	1	Reinforcement 2 below rear profile	
26	250180385	1	Reinforcement below rear profile	
27	1229140073	1	End outline marker right	
28	250180709	2	Threadplate for main switch	
29	2514862521	1	Main switch	
30	250180682	1	Front panel for box for main switch	
31	250180002	1	Chassis Frame	
32	250180834	1	Mounting bracket for water outlet in chassis	Used only without a water tank
33	250180835	1	Mounting plate for chassis	Used only without a water tank

Date: 19/12-2016	**Pump Unit APV250**	1 2	**A-Z**
31	Model year 2015 - 2018		

Control box

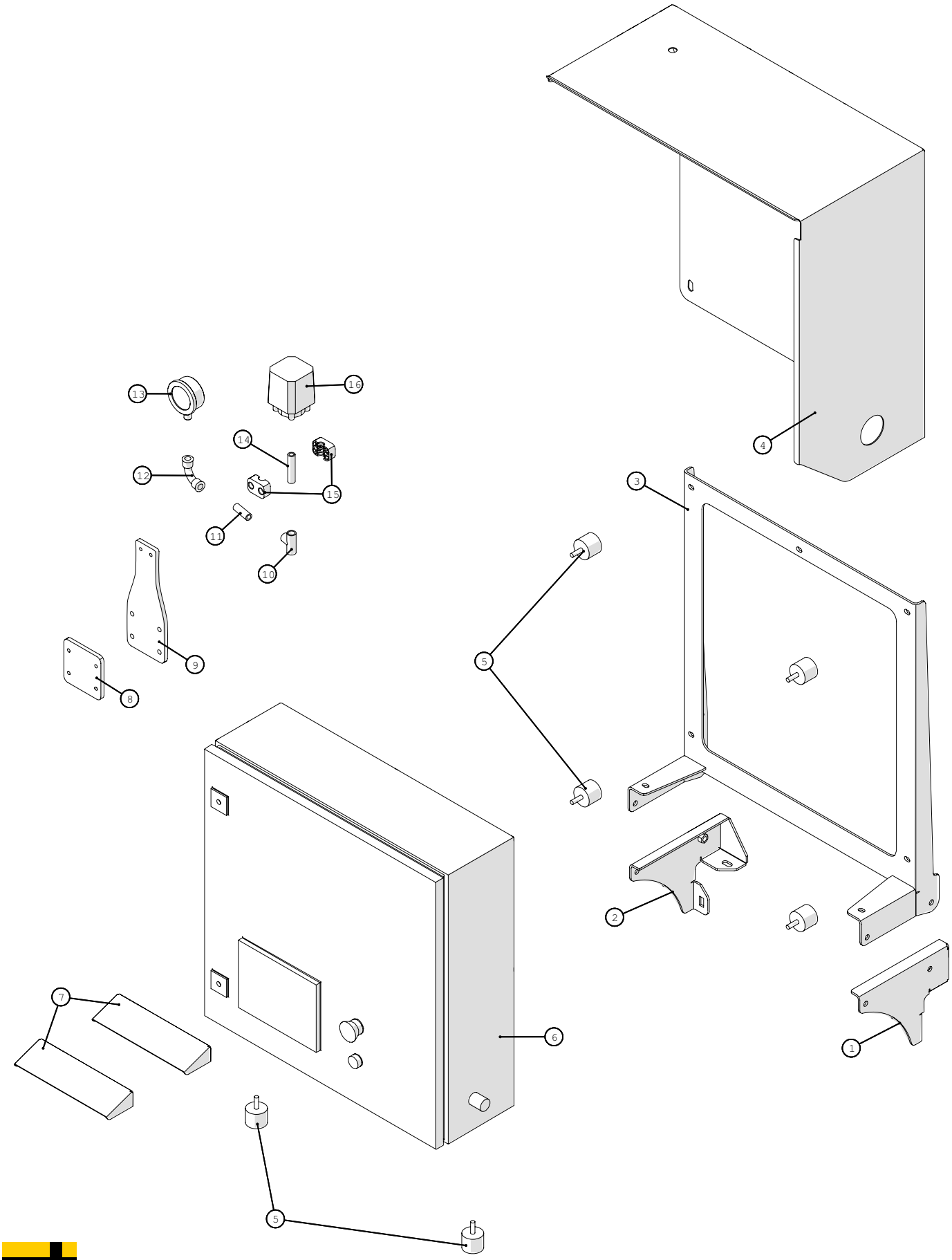

Control box				
Pos. no.	**Item no.**	**Pcs.**	**Description**	**Note**
1	250180801	1	Bracket 2 for tiltable control box	
2	250180800	1	Bracket for tiltable control box	
3	250180789	1	Top part for tiltable control box	
4	250180596	1	Rain Cover for control box	
5	25017400	6	Vibration absorber	
6		1	Control box	
7	250180597	2	Rain Cover up screen	
8	250180084	1	Mounting plate	
9	250181062	1	Bracket for Pressure switch and pressure gauge	
10	000130402	1	Tee No.130 galv. ¼”	
11	012040402	1	Nipple galv. ¼”x40mm	
12	000002402	1	Elbow No.2 galv. ¼”	
13	13180060	1	Glycirin pressure gauge 0-10bar ¼”	
14	012060402	1	Nipple galv. ¼”x60mm	
15	51000015-01	2	Clamp single 15mm	
16	25017051	1	Pressure switch 7-22Bar	

Battery Box

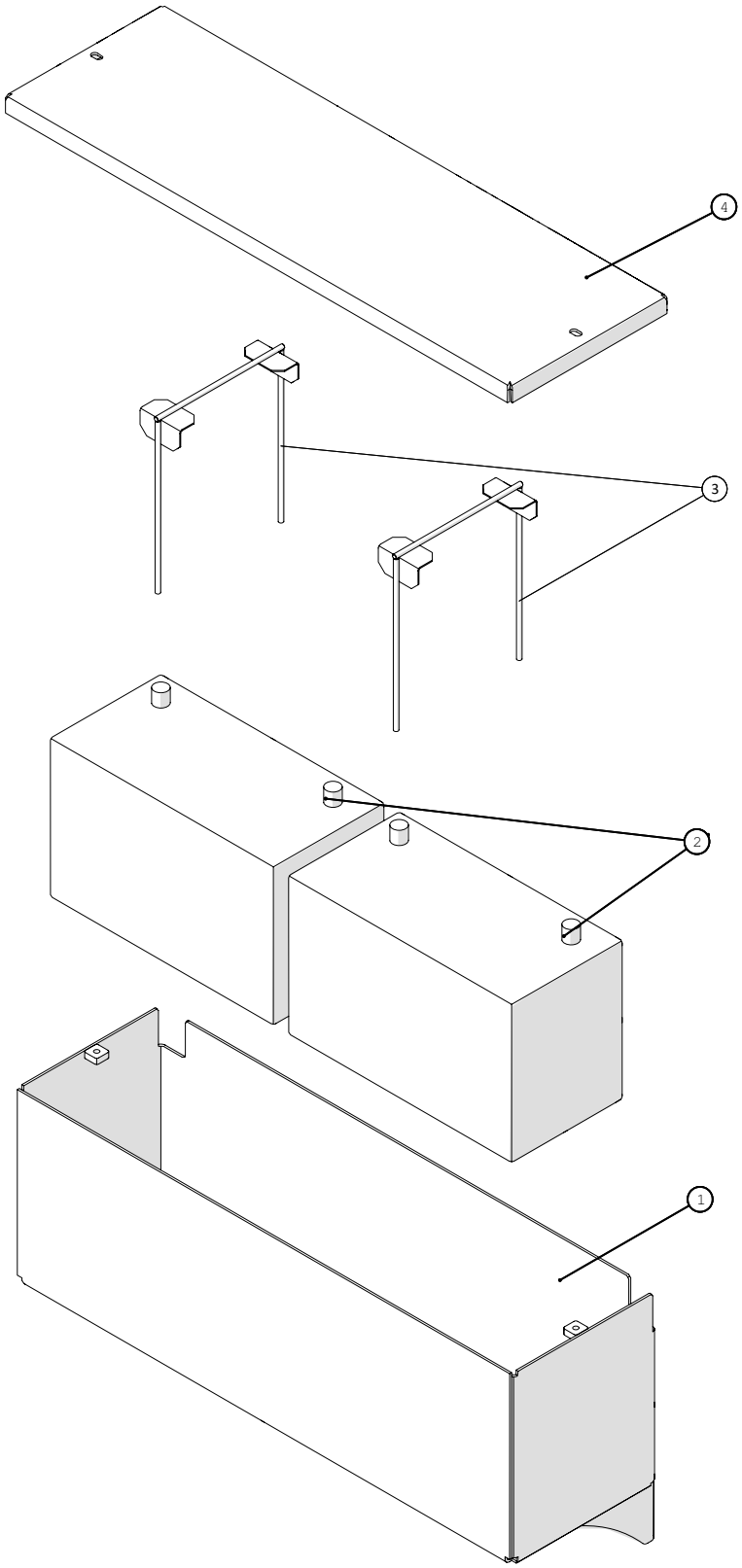

Fælledvej 10 • DK-7200 Grindsted • Tel. +45 76 72 13 00 • Fax +45 76 72 13 98

Battery Box				
Pos. no.	**Item no.**	**Pcs.**	**Description**	**Note**
1	250180205	1	Battery Box	
2	25017385	2	Battery 61047 type643	
3	251476636540	2	Battery bracket	
4	250180206	1	Lid for battery box	

Brakes - Hydraulic

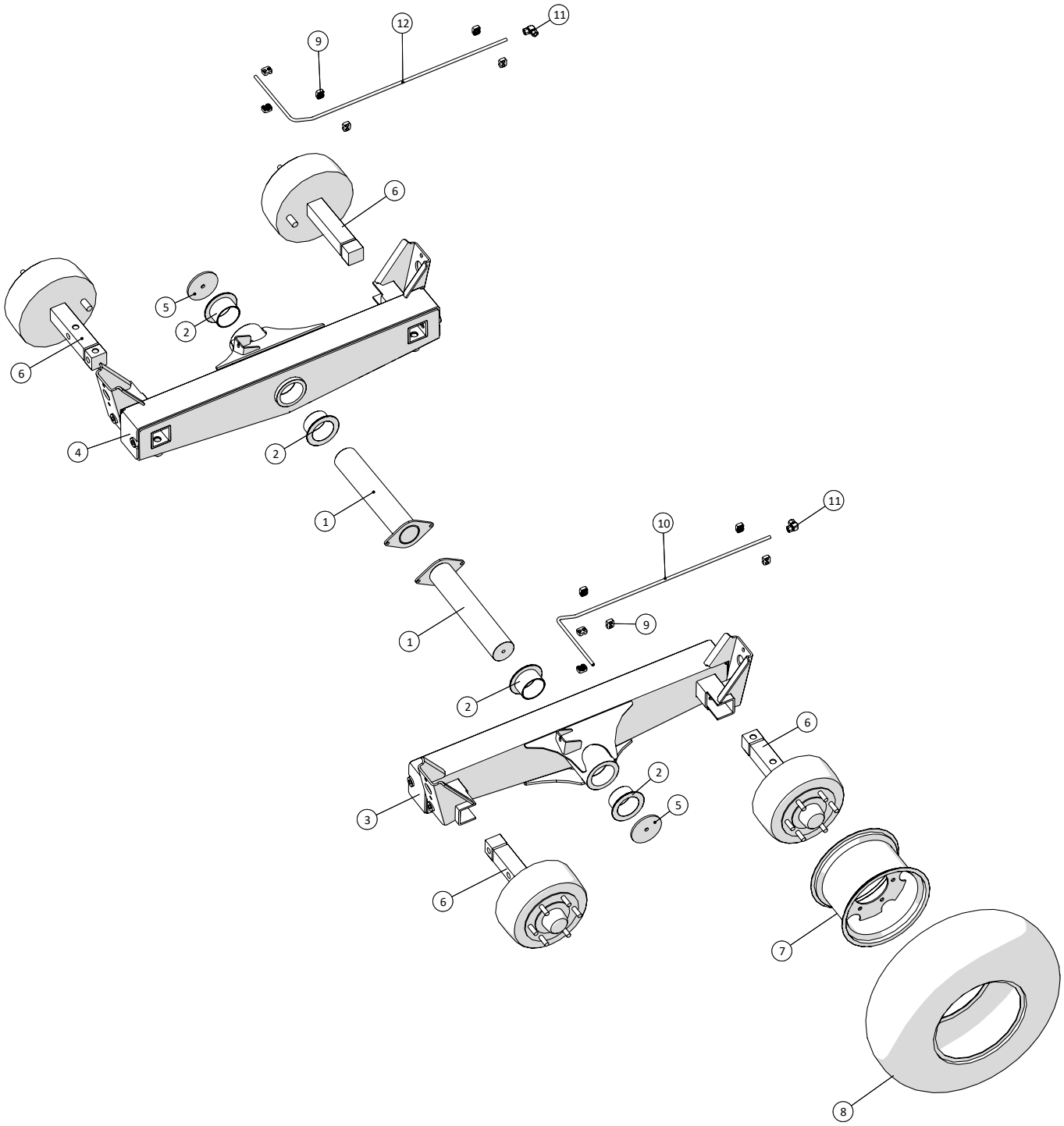

Fælledvej 10 • DK-7200 Grindsted • Tel. +45 76 72 13 00 • Fax +45 76 72 13 98

Brakes - Hydraulic				
Pos. no.	**Item no.**	**Pcs.**	**Description**	**Note**
1	250180463	2	Shaft for suspension	
2	250180584	4	Bushing for mounting shaft	
3	250180448	1	Suspension, left	
4	250180495	1	Suspension, right	
5	250180464	2	End cover for axle	
6	250180649	2	Hydraulic hub	
7	250180631	2	Hydraulic hub	
8	25017310	4	Rim 9,00x15,3	
9	25017305	4	Allianca tire 11,5/80x15,3/14TT 320	
10	51000012-01	12	Clamp - single, 12mm	
11	250180587	1	Pipe for hydraulic brakes	
12	503373388	2	Union elbow L12	
13	250180588	1	Pipe 2 for hydraulic brakes	

Brakes - Pneumatic

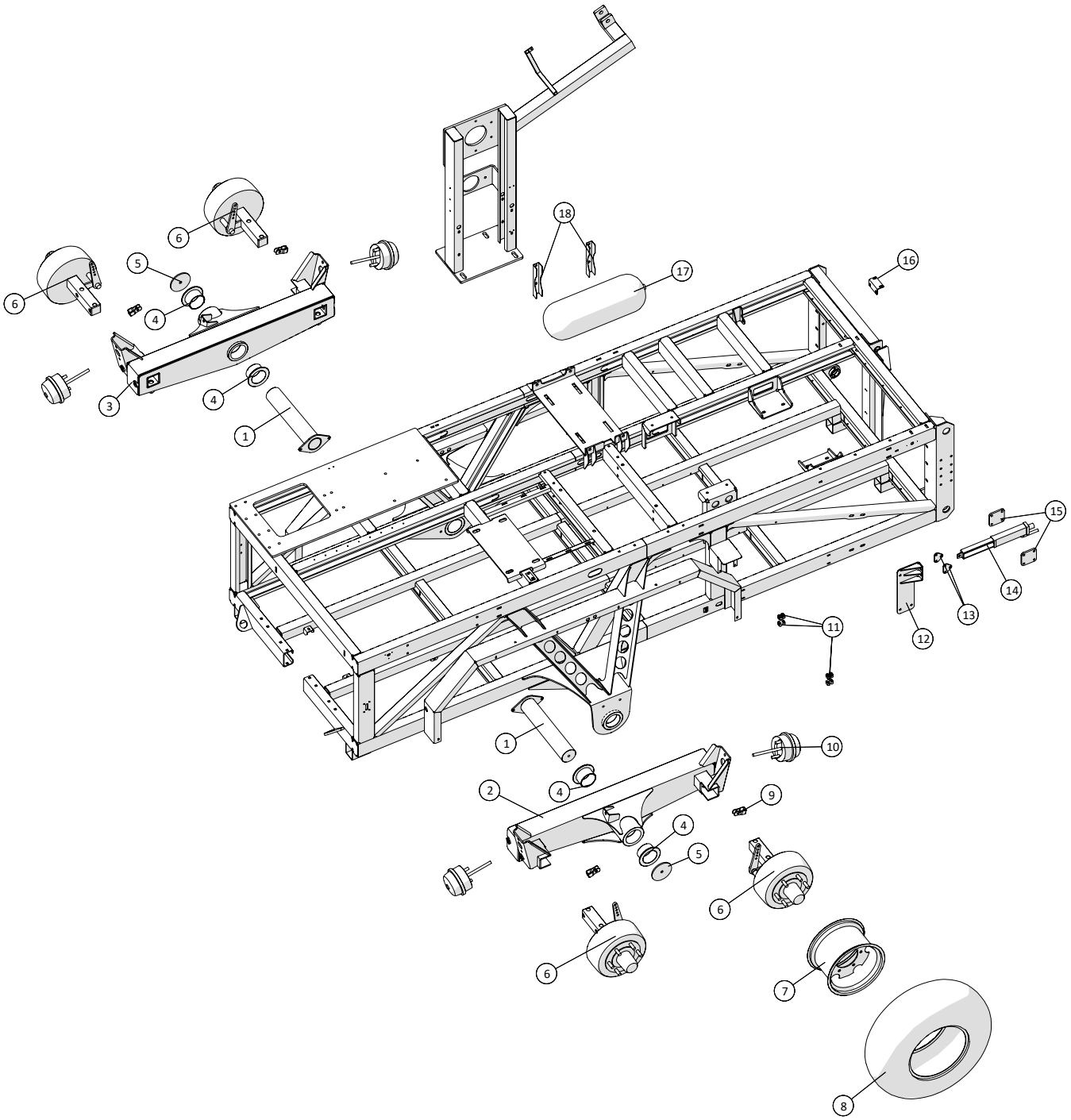

Fælledvej 10 • DK-7200 Grindsted • Tel. +45 76 72 13 00 • Fax +45 76 72 13 98

Brakes - Pneumatic				
Pos. no.	**Item no.**	**Pcs.**	**Description**	**Note**
1	250180463	2	Shaft for suspension	
2	250180448	1	Suspension, left	
3	250180495	1	Suspension, right	
4	250180584	4	Bushing for mounting shaft	
5	250180464	2	End cover for axle	
6	25017311	4	Hub w/pneumatic brake	
7	25017310	4	Rim 9,00x15,3	
8	25017306	4	Allianca tires 11,5/80x15,3/18TT 320	
	25017315	4	Hose	
9	250180545	4	Clips for pneumatic brakes	
10	250180436	4	Pressurized air membrane	
11	51000015-01	4	Clamp - single, 15mm	
12	250180481	1	Bracket for parking brake cable	
13	250180473	2	Brackets for end to parking brake	
14	25017715	1	Parking brake release	
15	250180479	2	Plate for parking brake	
16	250180689	1	Plate for air valve for pneumatic brakes	
17	25017710	1	Pressurized air tank 40ltr.	
18	25017711	2	tank mounting	

Support leg

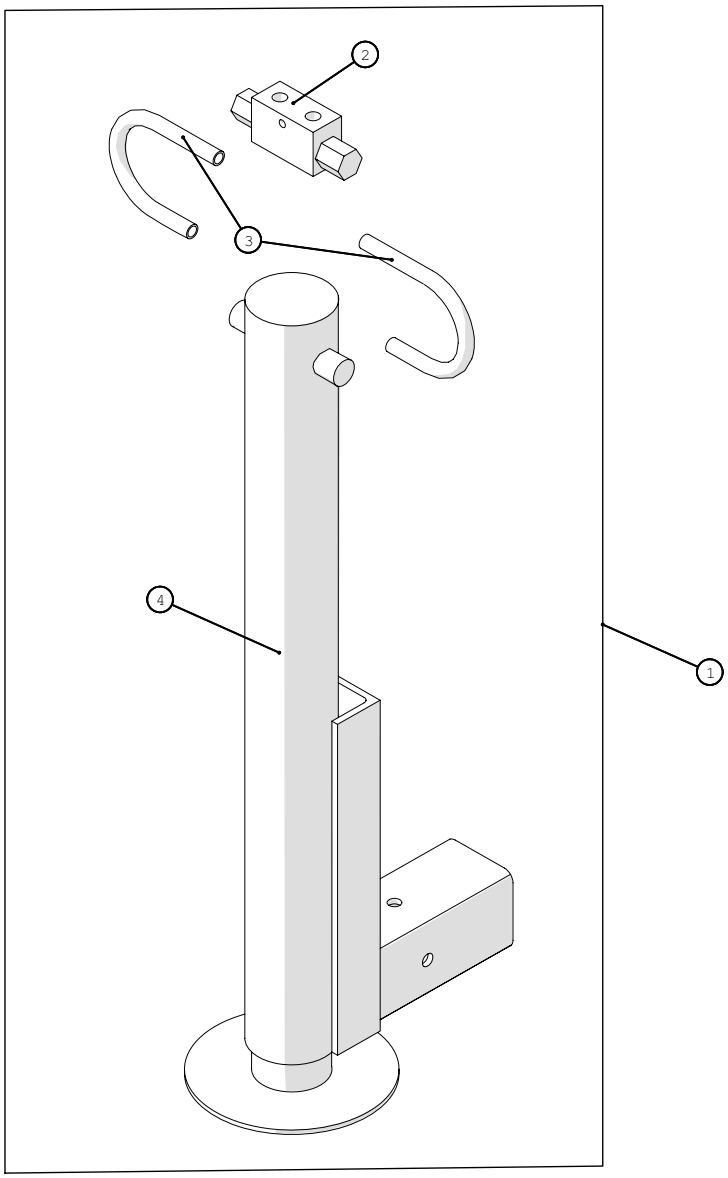

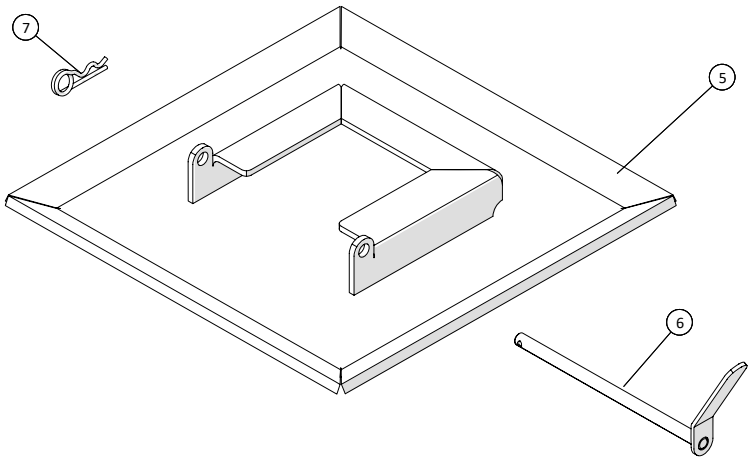

Support leg				
Pos. no.	**Item no.**	**Pcs.**	**Description**	**Note**
1	250180663	1	Support leg complete	
2	25017185	1	Double locking valve 1/4” VBPDE	
3	2501790288	2	Hydraulic pipes	
4	250180659	1	Support leg	
5	250180740	1	Base for support leg	
6	250180744	1	Pin for lock of base	
7	1514009550030	1	Double Loop Hair Pin 3mm galv.	

Date: 19/12-2016	**Pump Unit APV250**	1 2	**A-Z**
36	Model year 2015 - 2018		

BAUER SX2000 pump

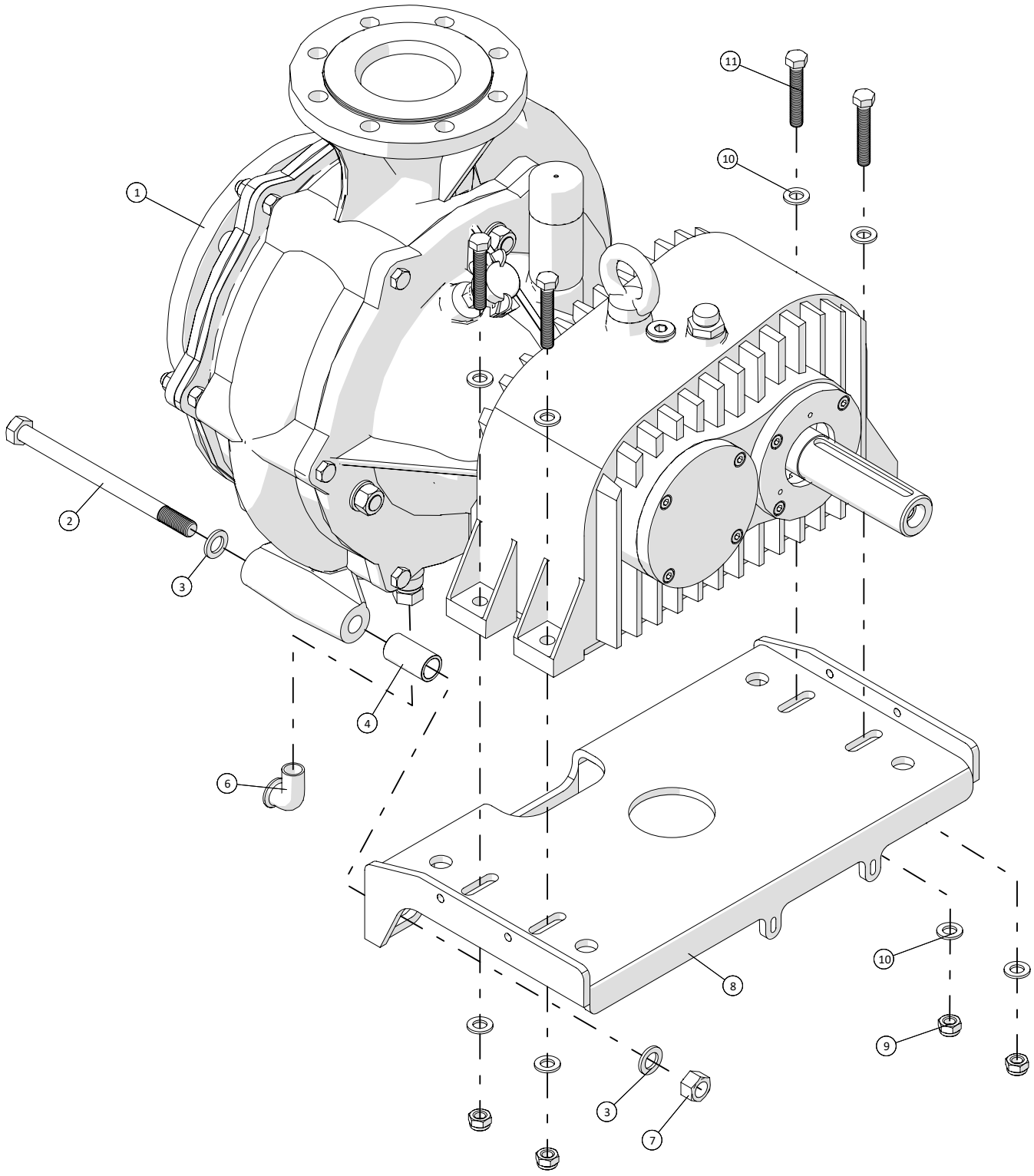

Fælledvej 10 • DK-7200 Grindsted • Tel. +45 76 72 13 00 • Fax +45 76 72 13 98

BAUER SX2000 pump				
Pos. no.	**Item no.**	**Pcs.**	**Description**	**Note**
1	23053450030	1	Bauer Slurry Pump SX2000	
2		2	Steel Bolt M16x220	
3		4	Washer M16	
4	250180336	2	Spacer for pump	
5	13100064	1	Ball valve female/male ½”	
6	000092404	1	Elbow 90° No.92 ½”	
7		2	Lock nut M16	
8	250180063	1	Plate for pump	
9		4	Lock nut M12	
10		8	Washer M12	
11		4	Bolt M12x70	

Hub for Hydraulic brake

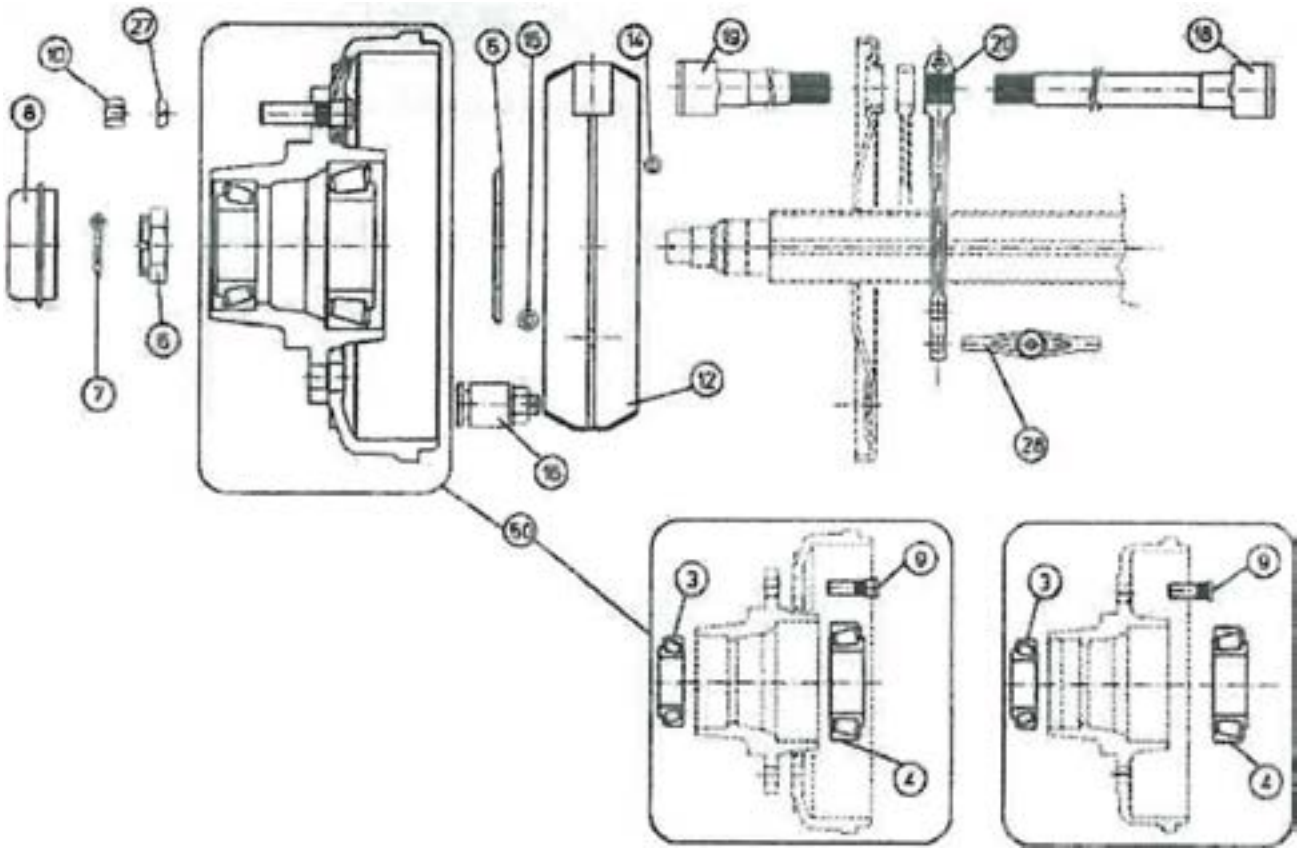

Hub for Hydraulic brake				
Pos. no.	**Item no.**	**Pcs.**	**Description**	**Note**
3	2502311F034		Wheel bearings outside 30210	
4	2502311F040		Wheel bearings inside 30213	
5	2502324F003		Seal 65-120	
6	2502328F012		Crown nut M39x2 60x25	
7	2502310F006		Pin 6,3 x55	
8	2502307F049		Fat cap D.90mm	
9	2502309F024		Wheel bolts M18x1, 5x62	
10	2502312F010		Wheel nut M18x1, 5 spheric flange	
12	2502316A052		Brake shoes complete fixed 3009/1	
14	2502322F006		Spring top 18x4, 5x170 322F006	
16	2502356A0341		Hydraulic brake cylinder	
19	2502301F502		Brake shaft 30x24 100-180	
20			Brake lever	not available
50	2502323092FX		Drum hub - Aggregate	
	2502331F043		Brake drum 300x90 6L	

Hub for Pneumatic brake

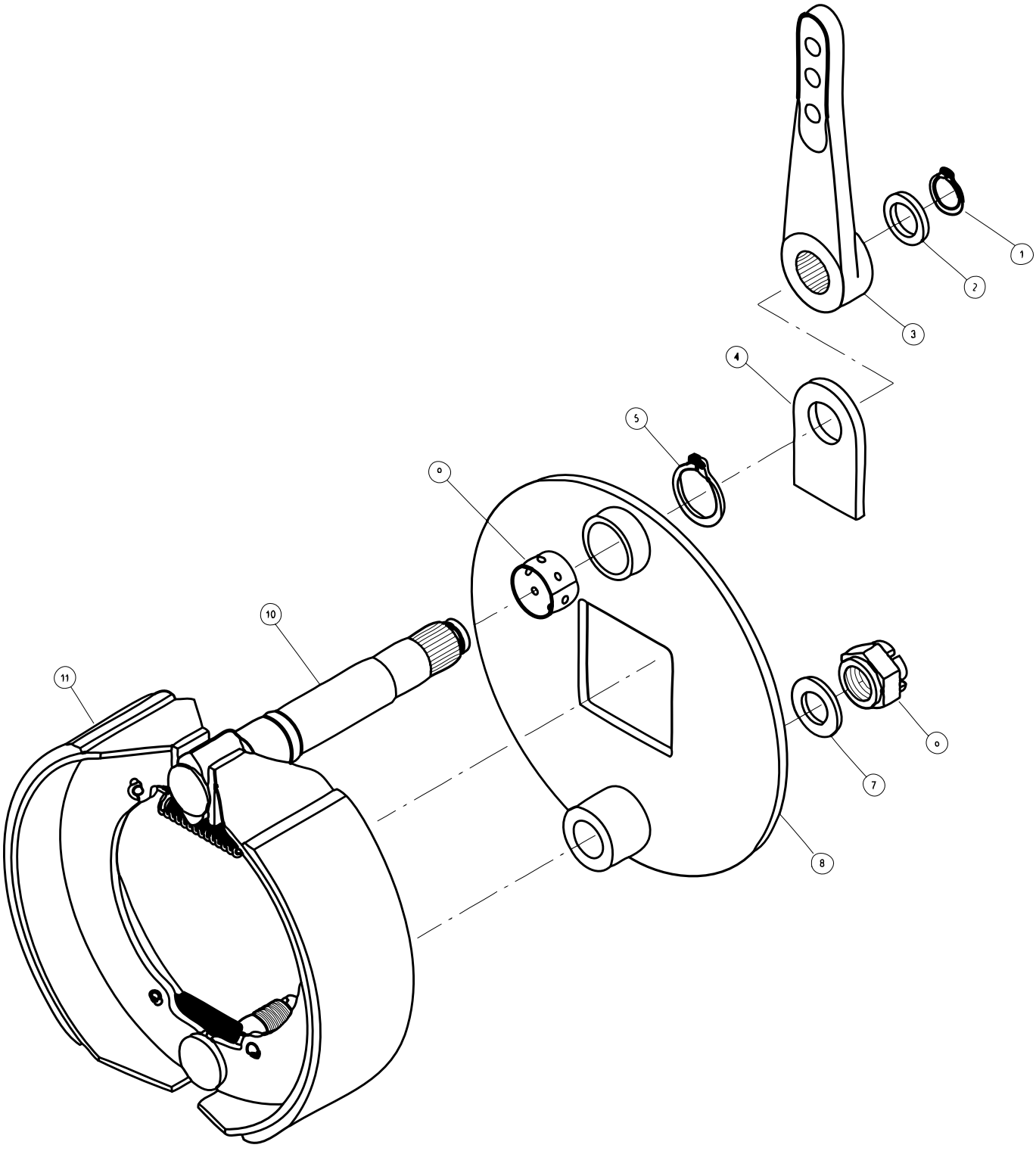

Fælledvej 10 • DK-7200 Grindsted • Tel. +45 76 72 13 00 • Fax +45 76 72 13 98

Hub for Pneumatic brake				
Pos. no.	**Item no.**	**Pcs.**	**Description**	**Note**
1	250258508		Retaining ring	
2	25029812601		Washer	
3	25027611503		Brake lever	
4	250274402106		Bracket	
5	250258513		Retaining ring	
6	250297124B1		Castle nut	
7	25029800241		Washer	
8	2502741IC7015		Anchor Plate	
9	2502921B38		Bush	
10	250275A3552003		Brake shaft	
11	2502731IC01		Brake shoes	

Hub for Pneumatic brake

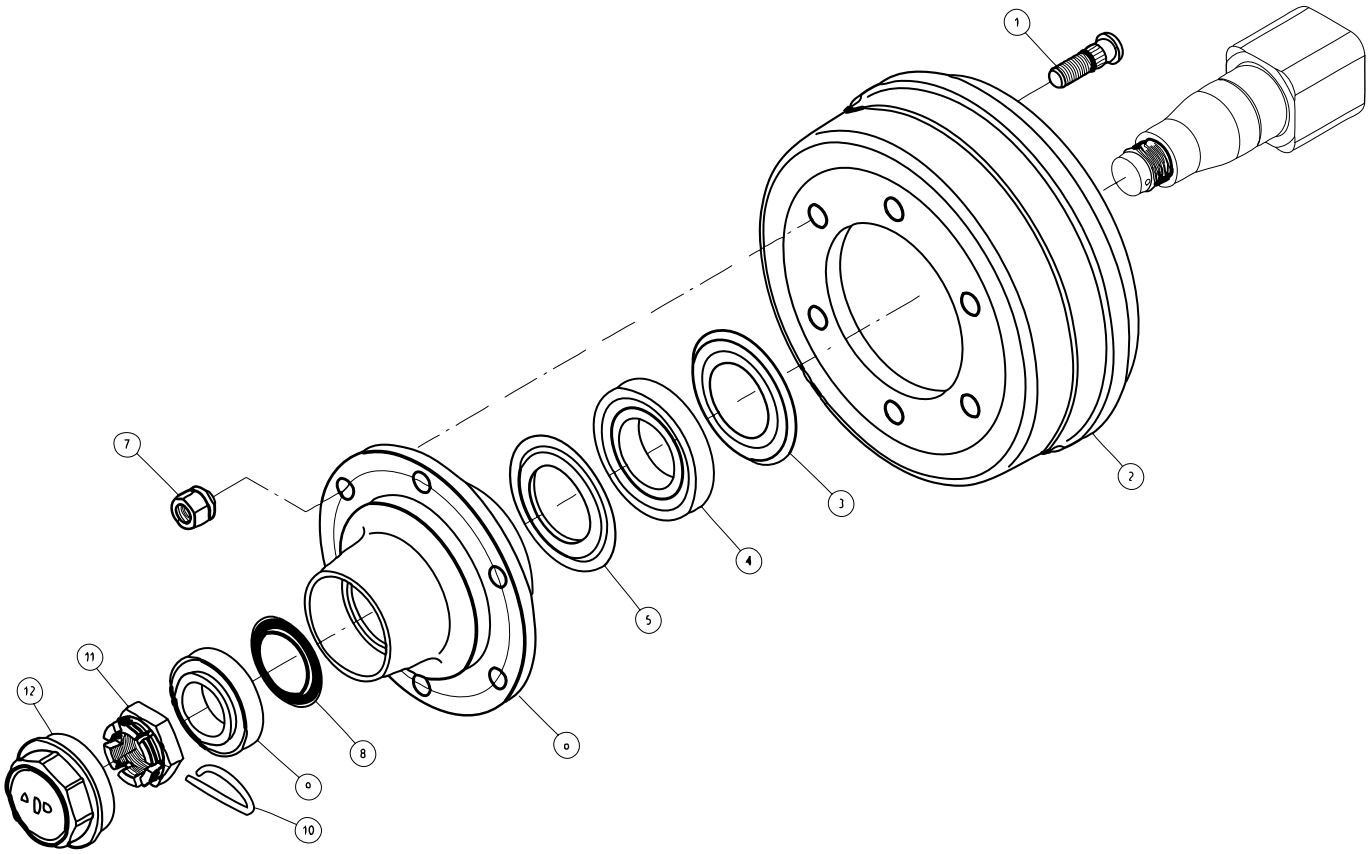

Agrometer a/s

Fælledvej 10 • DK-7200 Grindsted • Tel. +45 76 72 13 00 • Fax +45 76 72 13 98

Hub for Pneumatic brake				
Pos. no.	**Item no.**	**Pcs.**	**Description**	**Note**
1	250257118B4		Wheel Bolt	
2	250266LJB0605		Brake Drum	
3	25025411201		Sealing ring	
4	250259130213		Bearing	
5	25025511201		Sealing ring	
6	250261NA002		Hub	
7	250257318B4		Wheel nut	
8	25025530801		Sealing ring	
9	250259132210		Bearing	
10	250258205		Pin	
11	25025753B2		Castle nut	
12	250256109003		Grease Cap	

Screw compressor compact module NK 200

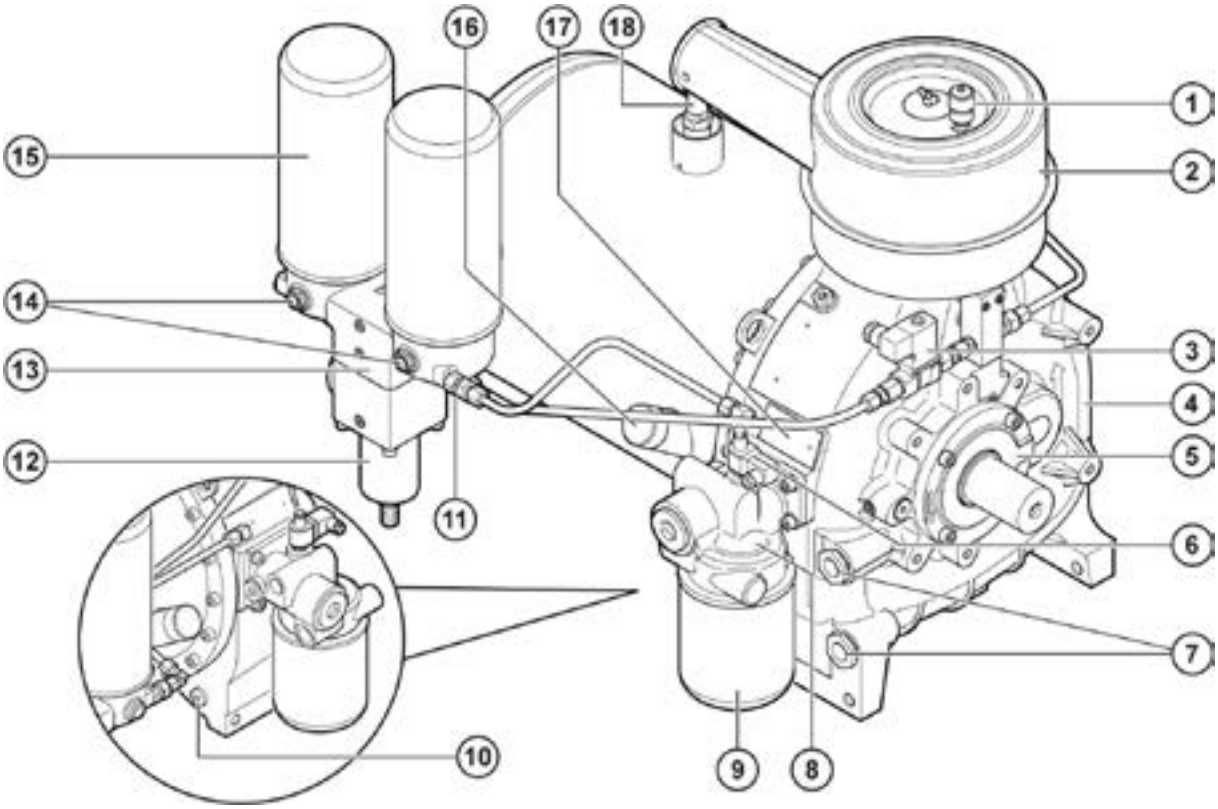

Screw compressor compact module NK 200				
Pos. no.	**Item no.**	**Pcs.**	**Description**	**Note**
1	25030509		Maintenance indicator for intake filter	(optional)
2			Intake filter	
3			Control unit, electric	
4			NK 200 basic module	
5			End cover	
6			Differential pressure indicator	(optional)
7			Inspection glasses, oil level indicator	
8			Thermostat head	
9	25030506		Oil filter	
10			Oil drain screw	
11			Oil intake non-return valve	
12			Minimum pressure valve	
13			Double separator head	
14			Inspection glasses, oil separation	
15	25030508		Fine separator cartridge	
16			Oil filler opening	
17			Nameplate	
18	25017054		Safety valve	(optional)

Screw compressor NK 200 - Filter

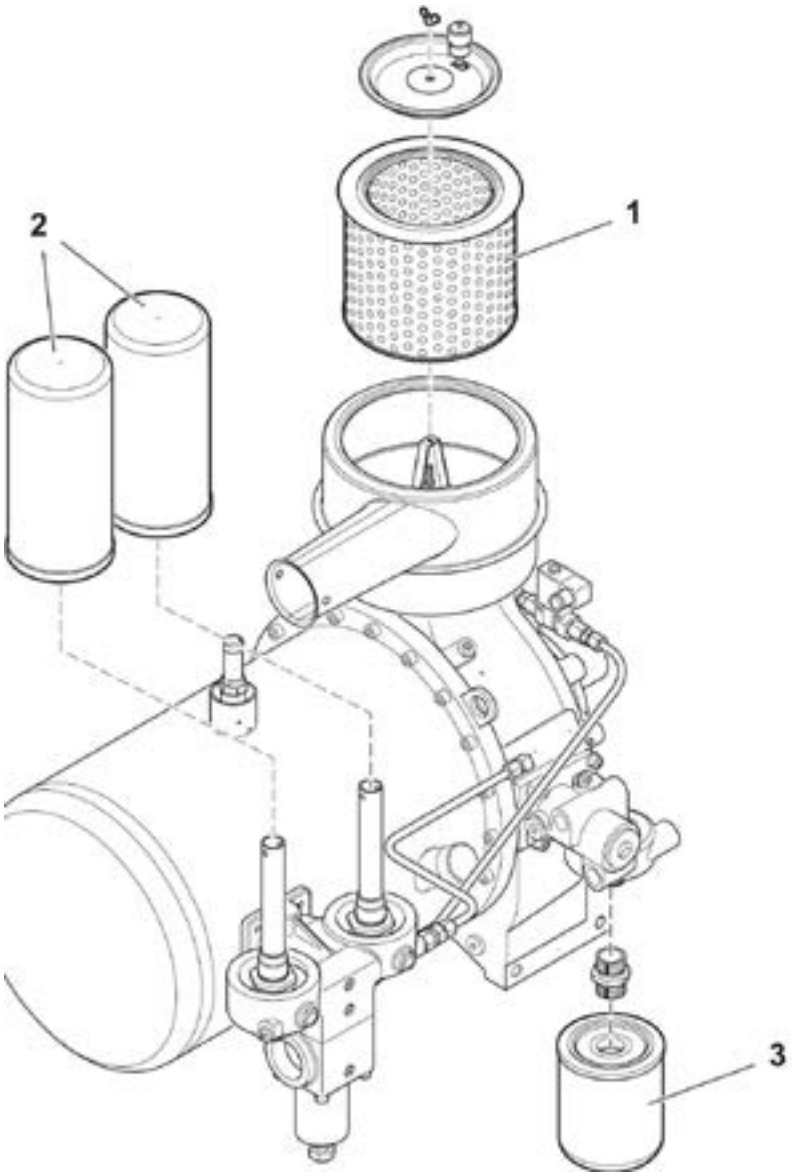

Screw compressor NK 200 - Filter				
Pos. no.	**Item no.**	**Pcs.**	**Description**	**Note**
1	25030507	1	Intake filter cartridge	
2	25030508	2	Separator cartridge	
3	25030506	1	Oil filter	

Screw compressor NK 200 - Components

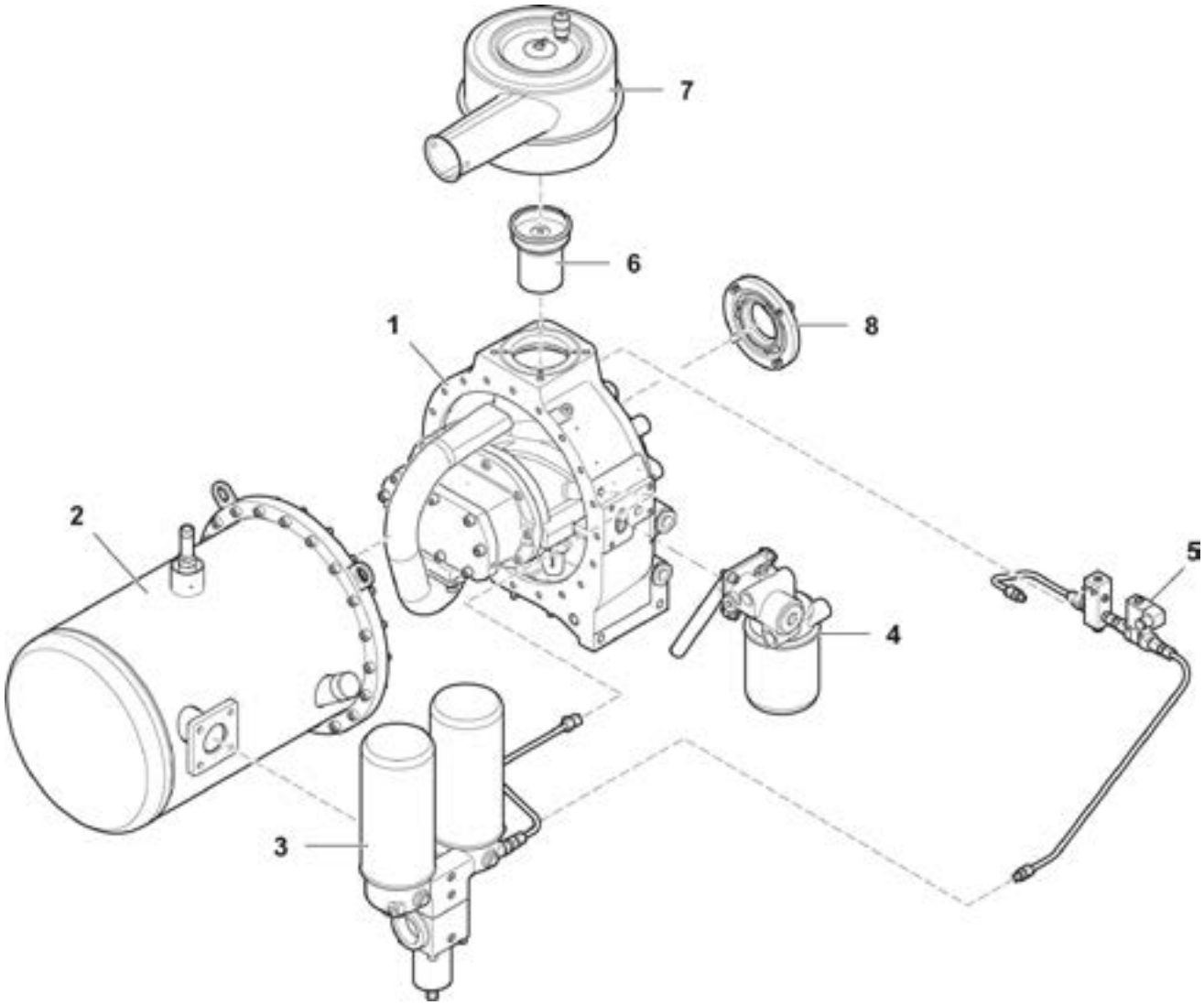

Fælledvej 10 • DK-7200 Grindsted • Tel. +45 76 72 13 00 • Fax +45 76 72 13 98

Screw compressor NK 200 - Components				
Pos. no.	**Item no.**	**Pcs.**	**Description**	**Note**
1		1	Basic module cpl.; standard version	See Single Parts, Basic Module
2			Separator vessel cpl., Variants Parts List	
		1	Separator vessel cpl. up to 75kW, Demister	See Single Parts, Separator vessel and Double separator
[ ]		1	Separator vessel cpl. up to 55kW, (short version)	Not shown in drawing
3		1	Double separator cpl	See Single Parts, Separator vessel and Double separator
4			Thermostat head with Oil-Filter cpl., Variants Parts List	
	2501110331	1	Thermostat head with Oil-Filter 70°C cpl.	See Single Parts, Thermostat head
[ ]	250186954	1	Thermostat head with Oil-Filter 83° cpl.	Not shown in drawing
5			Control block electric cpl., Variants Parts List	
	2501120680	1	Control block electric cpl., with 2/2-way solonoid valve; ⅜“; 230V 50Hz; FPM; NO; PN16	See Single Parts, Control Block Electric
	2501120681	1	Control block electric cpl., with 2/2-way solonoid valve; ⅜“; 24V 50Hz; FPM; NO; PN16	See Single Parts, Control Block Electric
	2501120682	1	Control block electric cpl., with 2/2-way solonoid valve; ⅜“; 110V; 50-60Hz; FPM; NO; PN16	See Single Parts, Control Block Electric
	2501120683	1	Control block electric cpl., with 2/2-way solonoid valve; ⅜“; 24V; DC; FPM; NO; PN16	See Single Parts, Control Block Electric
6		1	Intake control cpl.	See Single Parts, Intake Control and Intake Filter
7		1	Intake filter cpl.	See Single Parts, Intake Control and Intake Filter
8			Front cover cpl., Variants Parts List	
		1	Front cover cpl.	See Single Parts Front Cover
[ ]		1	Front cover cpl.; with dust cover	Not shown in drawing

Screw compressor NK 200 - Maintenance Kit, Bearing and Shaft Sealing

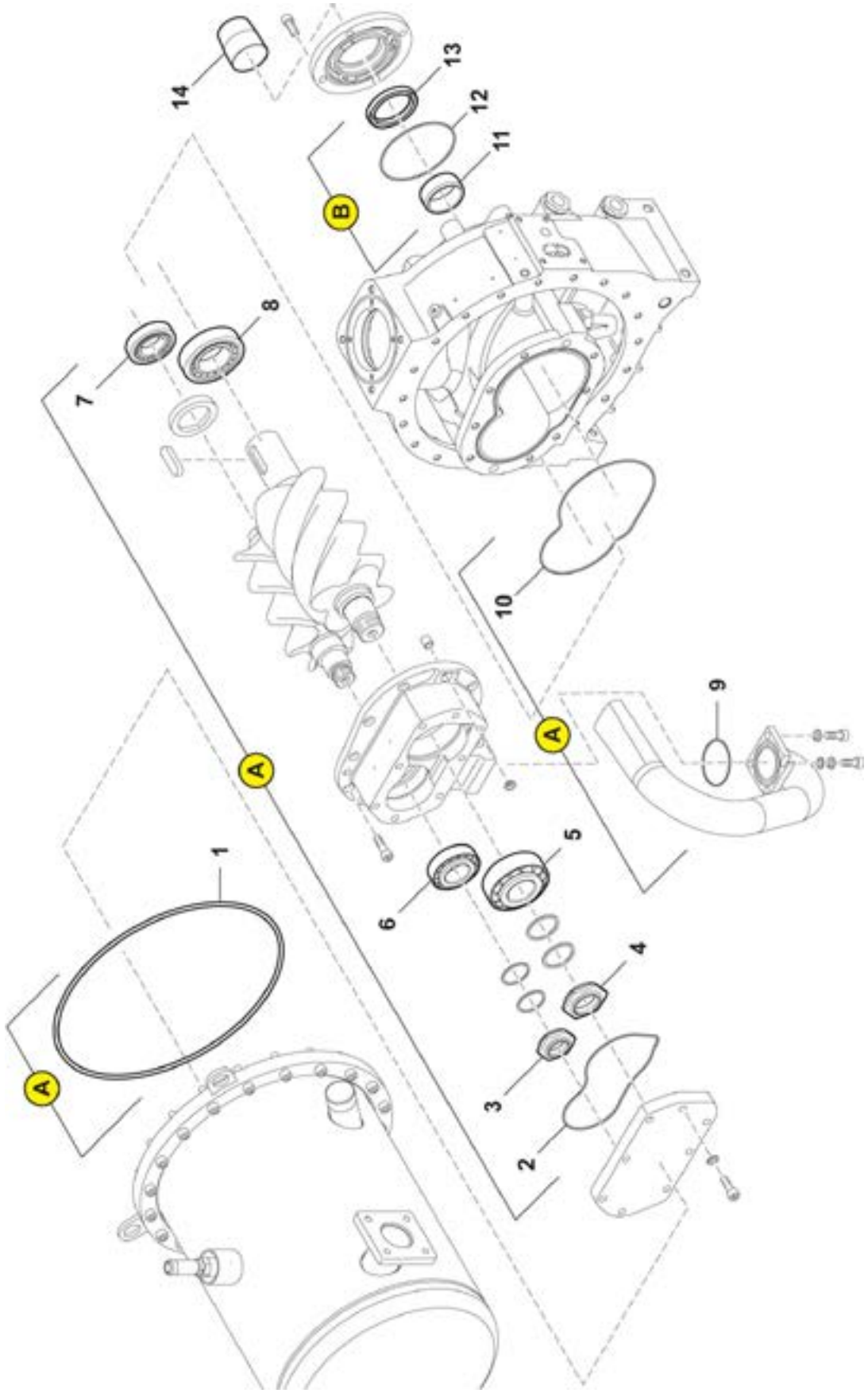

Screw compressor NK 200 - Maintenance Kit, Bearing and Shaft Sealing				
Pos. no.	**Item no.**	**Pcs.**	**Description**	**Note**
A	250187215	1	Maintenance Kit Bearing	
1	2501N28867	1	O-ring	
2	2501110265	1	O-ring	
3	2501111536	1	Shaft nut	
4	2501111535	1	Shaft nut	
5	2501111512	1	Taper roller bearing	
6	2501111520	1	Taper roller bearing	
7	2501111516	1	Roller bearing	
8	2501111515	1	Roller bearing	
9	2501100636	1	O-ring	
10	2501111532	1	O-ring	
B	2501111547	1	Maintenance Kit Shaft Sealing	
11	2501111522	1	Inner ring	
12	2501111531	1	O-ring	
13	2501111538	1	Shaft sealing ring	
14	2501110318	1	Mounting bush	
[15]	2501102017	1	Silicone	

Screw compressor NK 200 - Maintenance Kit: Minimum Pressure Valve, Double Separator

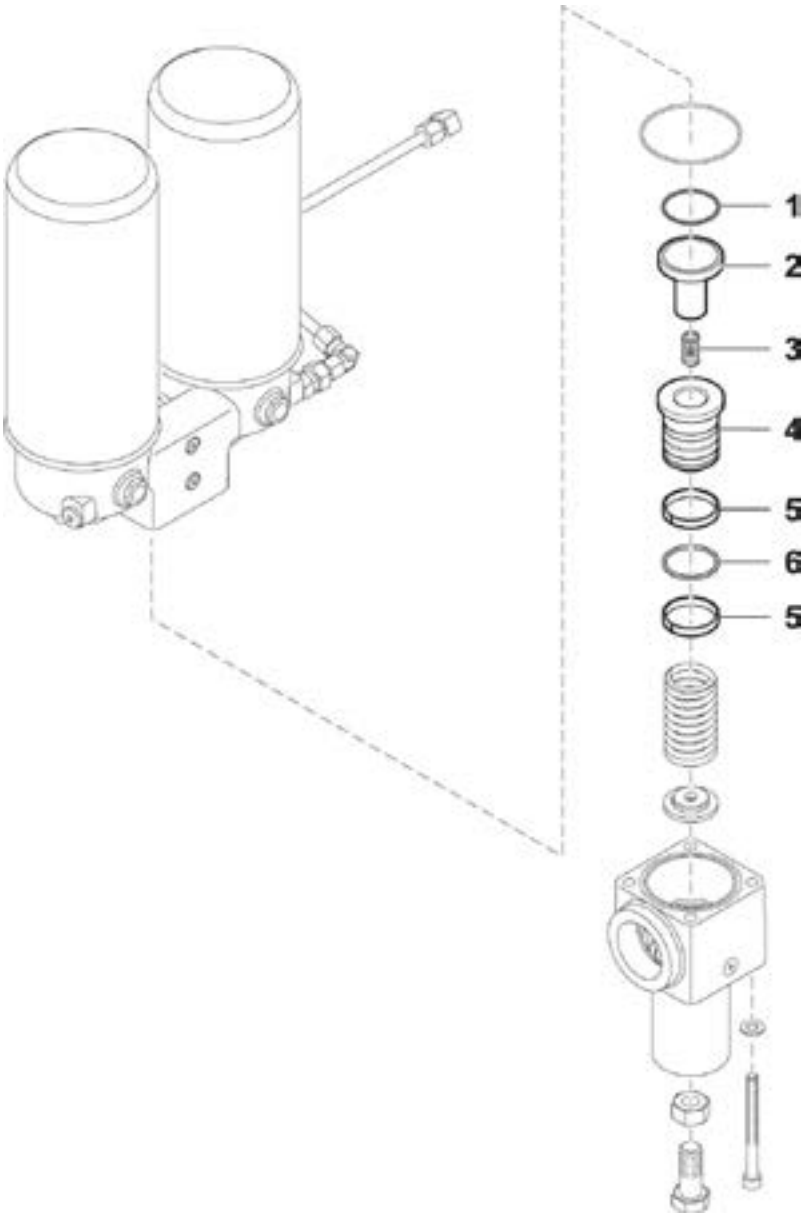

Fælledvej 10 • DK-7200 Grindsted • Tel. +45 76 72 13 00 • Fax +45 76 72 13 98

Screw compressor NK 200 - Maintenance Kit: Minimum Pressure Valve, Double Separator				
Pos. no.	**Item no.**	**Pcs.**	**Description**	**Note**
	2501N29070	1	Maintenance Kit Minimum Pressure Valve	
1	2501N29071	1	O-ring	
2	2501106426	1	Non return valve	
3	2501106427	1	Pressure spring	
4	2501106425	1	Piston package	
5	2501N29072	2	Slide ring sealing	
6	2501N29077	1	Gasket	

Screw compressor NK 200 - Maintenance Kit: Intake Valve

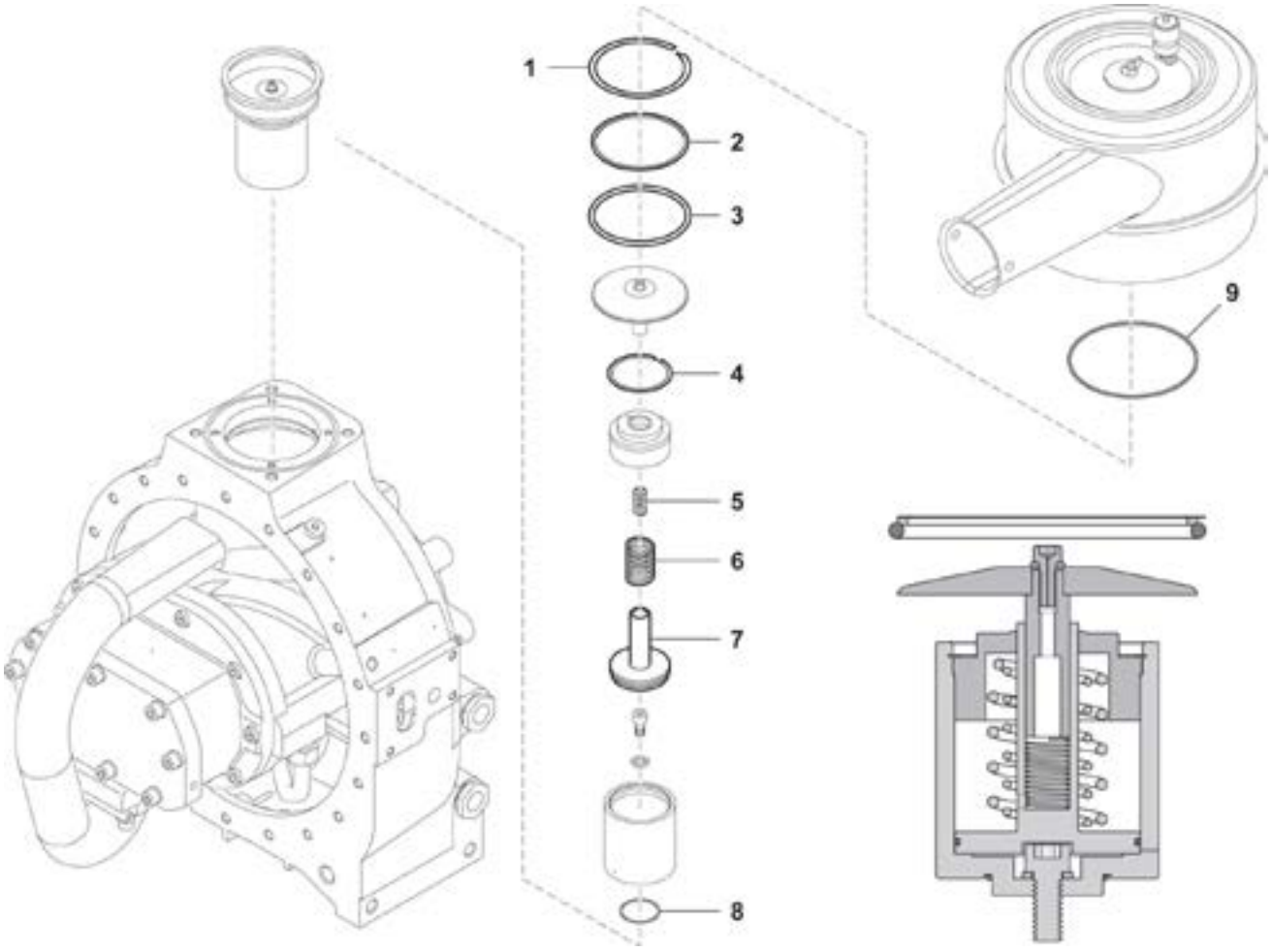

Fælledvej 10 • DK-7200 Grindsted • Tel. +45 76 72 13 00 • Fax +45 76 72 13 98

Screw compressor NK 200 - Maintenance Kit: Intake Valve				
Pos. no.	**Item no.**	**Pcs.**	**Description**	**Note**
	2501120710	1	Maintenance Kit Intake Valve	
1	2501110946	1	Snap ring CSSS Light	
2	2501116994	1	Ring	
3	2501110363	1	O-ring	
4	2501110947	1	Snap ring CSSS Light	
5	2501N28871	1	Pressure spring	
6	2501N28872	1	Pressure spring	
7	2501110356	1	Piston cpl.	
8	2501N28868	1	O-ring	
9	2501N19123	1	O-ring	

Screw compressor NK 200 - Single Parts: Basic Module

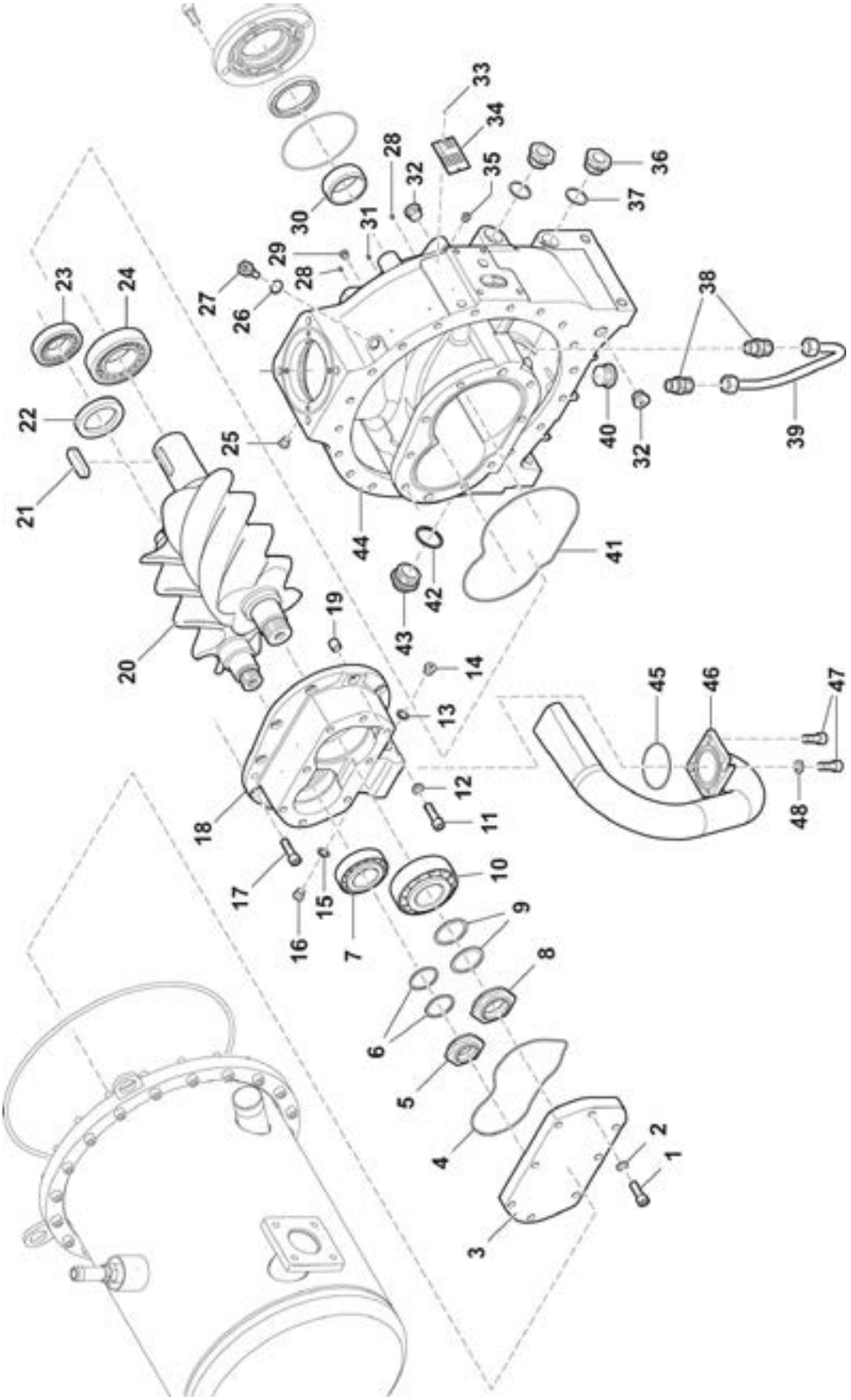

Fælledvej 10 • DK-7200 Grindsted • Tel. +45 76 72 13 00 • Fax +45 76 72 13 98

Screw compressor NK 200 - Single Parts: Basic Module				
Pos. no.	**Item no.**	**Pcs.**	**Description**	**Note**
1	2501N4569	8	Pan head screw	
2	2501111126	8	Washer	
3	250186808	1	End cover	
4	2501110265	1	O-ring	
5	2501111536	1	Shaft nut	
6	2501110227	2	Spacer	
7	2501111520	1	Tapper roller bearing	
8	2501111535	1	Shaft nut	
9	2501110226	2	Spacer	
10	2501111512	1	Tapper roller bearing	
11	2501N4569	2	Pan head screw	
12	2501111311	2	Ring	
13	2501106592	1	Sealing ring	
14	2501115409	1	Locking screw	
15	2501114250	1	Sealing ring	
16	2501112763	1	Locking screw	
17	2501114911	8	Pan head screw	
18	2501111653	1	Bearing Cover	
19	2501113365	2	Centering device	
20	2501111517	1	Rotor pair	
21	2501111533	1	Key	
22	2501111539	1	Ring	
23	2501111516	1	Roller bearing	
24	2501111515	1	Roller bearing	
25	2501N16394	1	Locking screw	
26	2501N1314	1	Sealing ring	
27	2501104565	1	Locking screw	
28	2501113932	2	Threated pin with nozzle	
29	2501N16504	1	Locking screw	
30	2501111522	1	Inner ring	
31	2501113931	1	Threated pin	
32	2501N90040	2	Locking screw	
33	2501103620	2	Pin	
34	2501110376	1	Name plate	
35	2501N16504	2	Locking screw	
36	2501111029	2	Oil level check	
37	2501N8114	2	Sealing ring	
38	2501N20075	2	Straight union	
39	250187335	1	Tube cpl.	

Screw compressor NK 200 - Single Parts: Basic Module

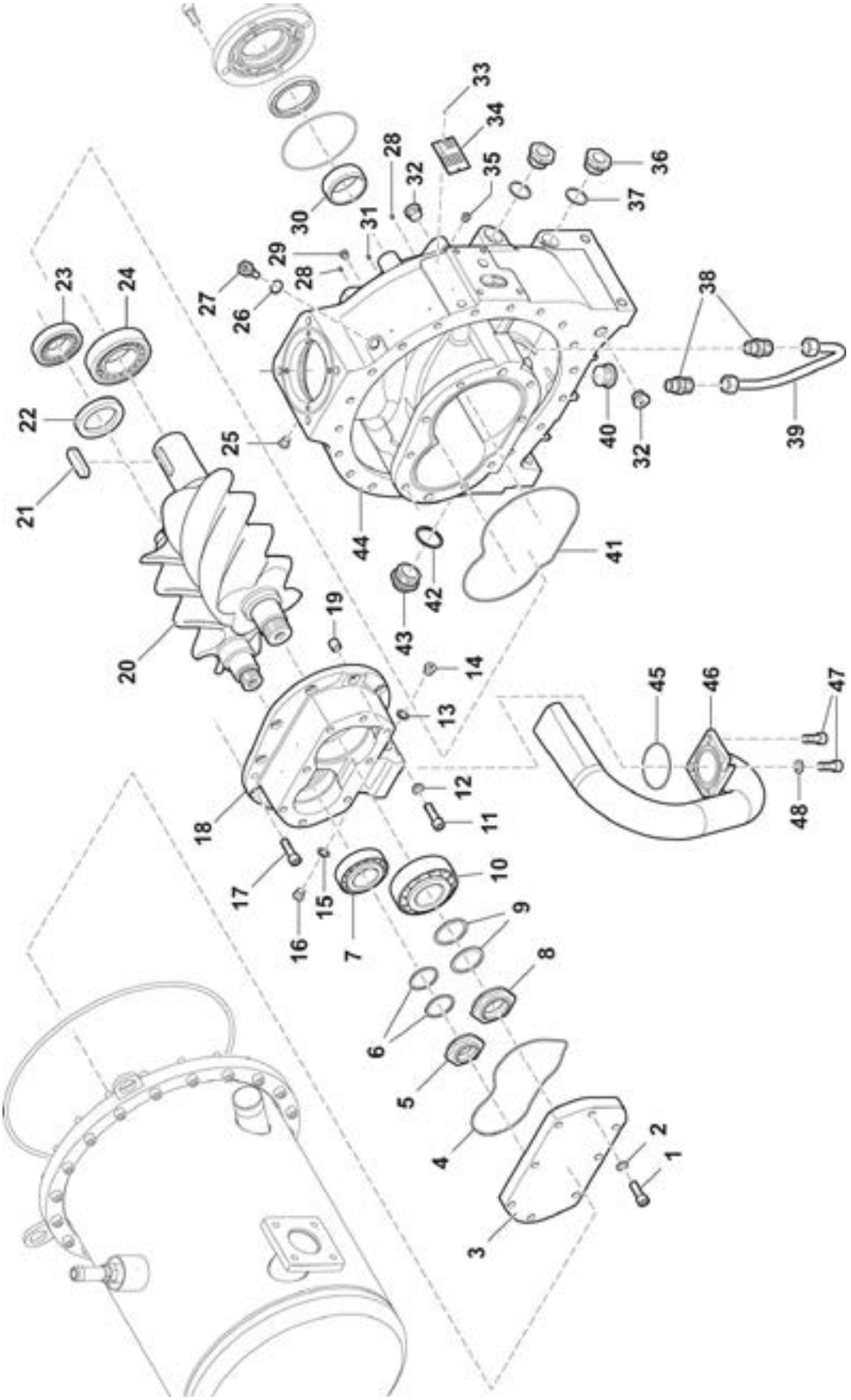

Fælledvej 10 • DK-7200 Grindsted • Tel. +45 76 72 13 00 • Fax +45 76 72 13 98

Screw compressor NK 200 - Single Parts: Basic Module				
Pos. no.	**Item no.**	**Pcs.**	**Description**	**Note**
40	2501N16391	1	Locking screw	
41	2501111532	1	O-ring	
42	2501N7758	1	Sealing ring	
43	2501114993	1	Locking screw	
44	2501110662	1	Housing	
45	2501100636	1	O-ring	
46	250185180	1	Outlet tube	
47	2501112765	4	Pan head screw	
48	2501103582	2	Lock washer	

Screw compressor NK 200 - Single Parts: Front Cover

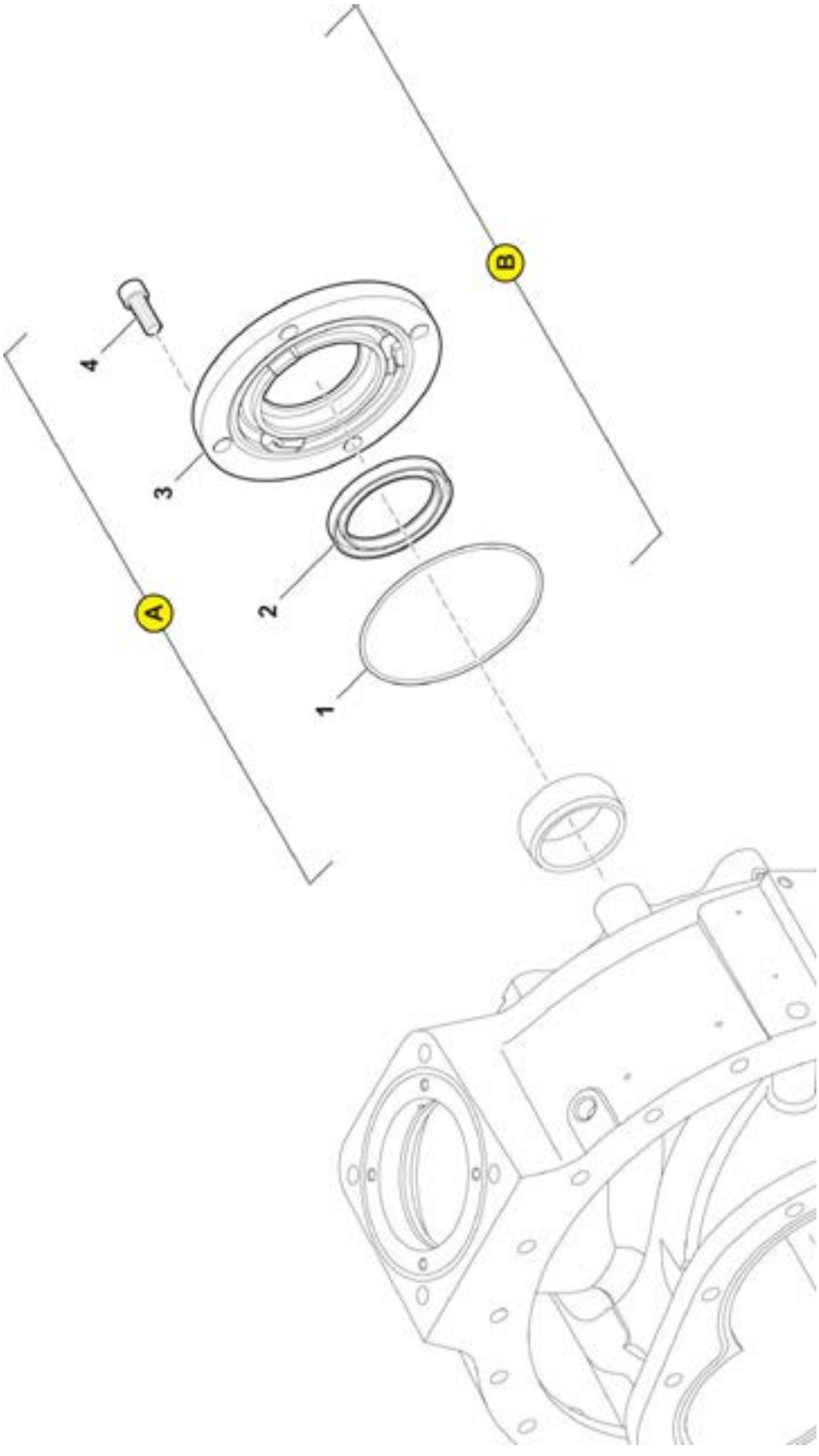

Screw compressor NK 200 - Single Parts: Front Cover				
Pos. no.	**Item no.**	**Pcs.**	**Description**	**Note**
A	2501120125	1	Front Cover cpl.; Standard	
1	2501111531	1	O-ring	
2	2501111538		Shaft sealing ring	
3	2501111514	1	Front cover	
4	2501112765	4	Pan head screw	
B	250187866	1	Front cover cpl.; with Dust Cover	
1	2501111531	1	O-ring	
[2]	250187860		Shaft sealing ring with dust cover	
3	2501111514	1	Front cover	
4	2501112765	4	Pan head screw	

Screw compressor NK 200 - Single Parts: Separator vessel and Double separator

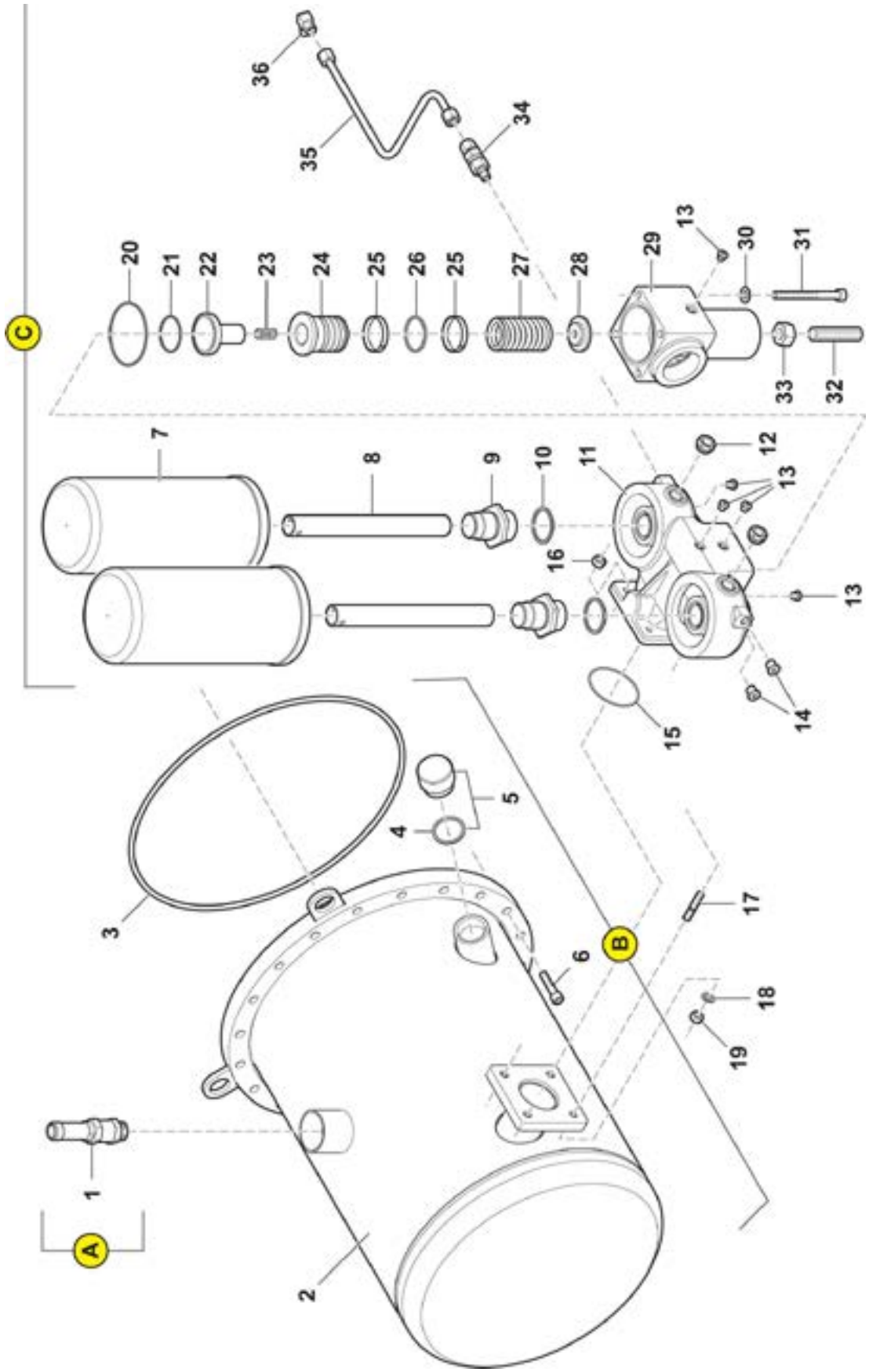

Screw compressor NK 200 - Single Parts: Separator vessel and Double separator				
Pos. no.	**Item no.**	**Pcs.**	**Description**	**Note**
A			Front Cover cpl.	
1	25017054	1	Viton sealed safety valve; 3/4”; 10 bar	
B			Separator Vessel	
2			Separator vessel, Variants Parts List	
	250187681	1	Separator vessel (long) for Separator vessel 87849 cpl. up to 75 kW, Demister	Variant
[]	2501110812	1	Separator vessel (short) for Separator vessel 87250 cpl. up to 55 kW	Variant
3	2501N28867	1	O-ring	
4	2501115068	1	Gasket	
5	2501115100	1	Union	
6	2501115087	20	Pan head screw	
C			Double separator	
7	25030508	2	Separator cartridge	
8	2501109032	2	Tube, air guide tube	
9	2501109033	2	Double nipple	
10	2501N7758	2	Sealing ring	
11	2501110351	1	Double separator head	
12	2501115477	2	Gauge glas	
13	2501N16504	5	Locking screw	
14	2501N16394	2	Locking screw	
15	2501100636	1	O-ring	
16	2501N177	4	Hexagon nut	
17	2501N15972	4	Stud bolt	
18	2501N16	4	Washer	
19	2501N644	4	Hexagon nut	
20	2501N29082	1	O-ring	
21	2501N29071	1	O-ring	
22	2501115605	1	Non return valve	
23	2501106427	1	Pressure spring	
24	2501106425	1	Piston package	
25	2501N29072	2	Slide ring sealing	
26	2501N29077	1	Gasket	
27	2501106428	1	Pressure spring	
28	2501111289	1	Retainer	
29	2501110342	1	Valve housing	

Date: 19/12-2016	**Pump Unit APV250**	1 2	**A-Z**
47-1	Model year 2015 - 2018		

Screw compressor NK 200 - Single Parts: Separator vessel and Double separator

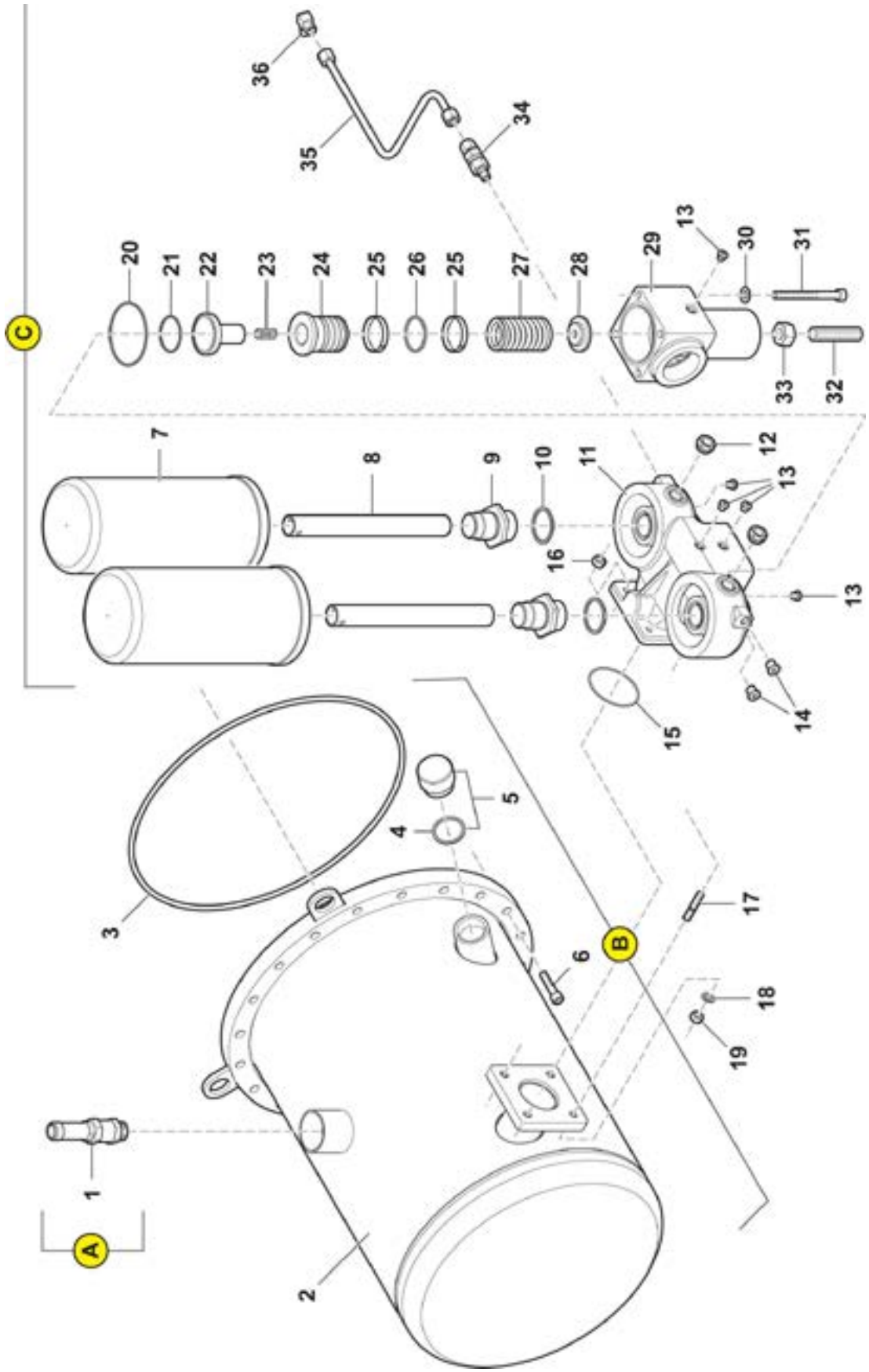

Fælledvej 10 • DK-7200 Grindsted • Tel. +45 76 72 13 00 • Fax +45 76 72 13 98

Screw compressor NK 200 - Single Parts: Separator vessel and Double separator				
Pos. no.	**Item no.**	**Pcs.**	**Description**	**Note**
30	2501N16	4	Washer	
31	2501N15650	4	Pan head screw	
32	2501N15653	1	Threated pin	
33	2501104791	1	Hexagon nut	
34	2501115605	1	Non return valve	
35	250186665	1	Tube with union	
36	2501N20007	1	Union	

Screw compressor NK 200 - Single Parts: Thermostat head

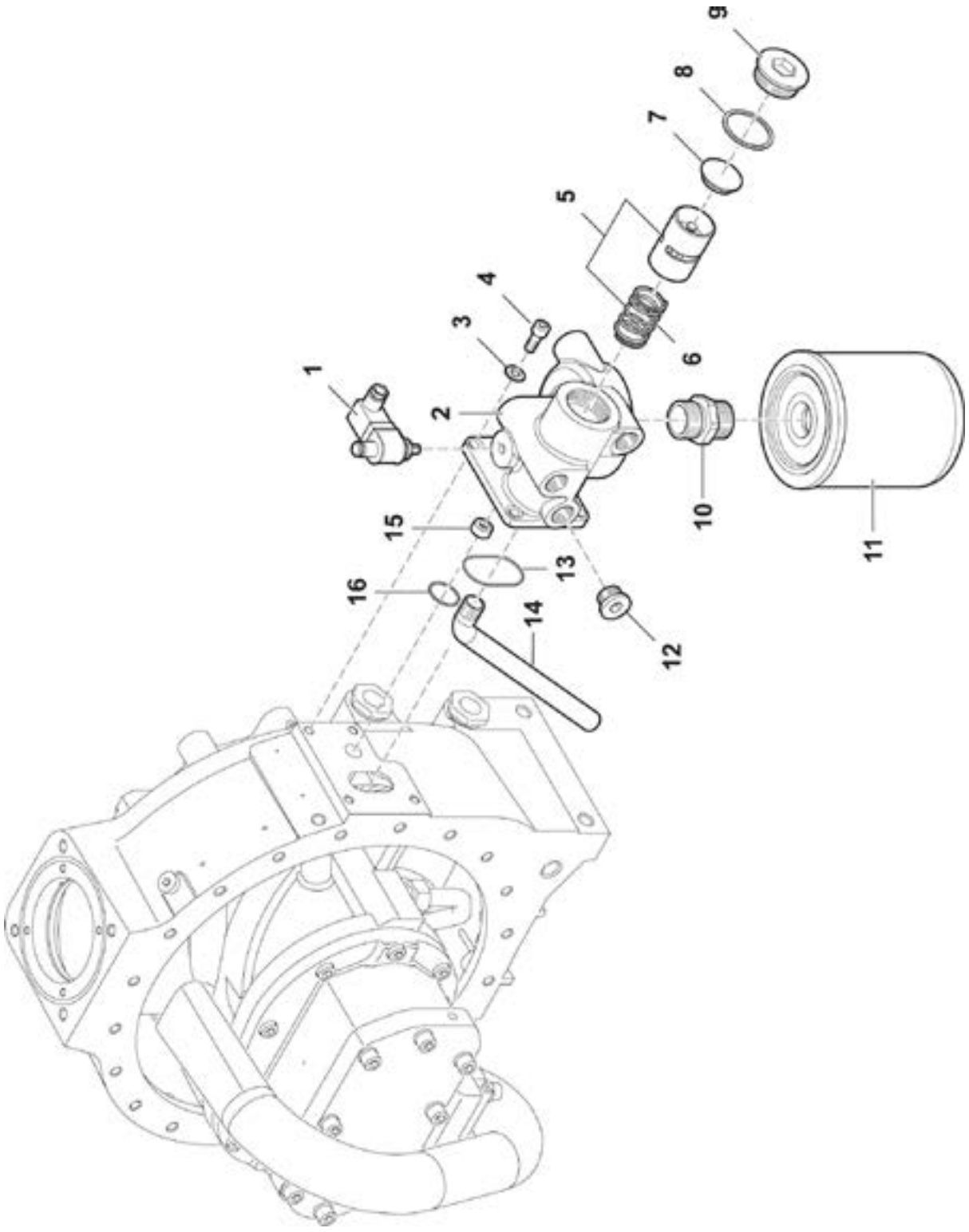

Fælledvej 10 • DK-7200 Grindsted • Tel. +45 76 72 13 00 • Fax +45 76 72 13 98

Screw compressor NK 200 - Single Parts: Thermostat head				
Pos. no.	**Item no.**	**Pcs.**	**Description**	**Note**
1	2501105572	1	Differential pressure indicator	
2	2501110326	1	Thermostat head	
3	2501N16	4	Washer	
4	2501N19566	4	Pan head screw	
5		1	Thermostat slider, Variants Parts List	
	2501110330	1	Thermostat slider with pressure spring for Thermostat head cpl. 110331 with Oil-Filter 70°	Variant
	2501N30026		Thermostat slider pressure spring for Thermostat head cpl. 86954 with Oil-Filter 83°	Variant
6	2501110329	1	Pressure spring	
7	2501120079	1	Washer	
8	2501N9522	1	Sealing ring	
9	2501N29025	1	Locking screw	
10	2501110338	1	Double nipple	
11	25030506	1	Oil filter	
12	2501N4976	1	Locking screw	
13	2501110955	1	O-ring	
14	2501110888	1	Pipe	
15	250186694		Locking screw	
16	2501106461	1	O-ring	

Screw compressor NK 200 - Single Parts: Control Block Electric

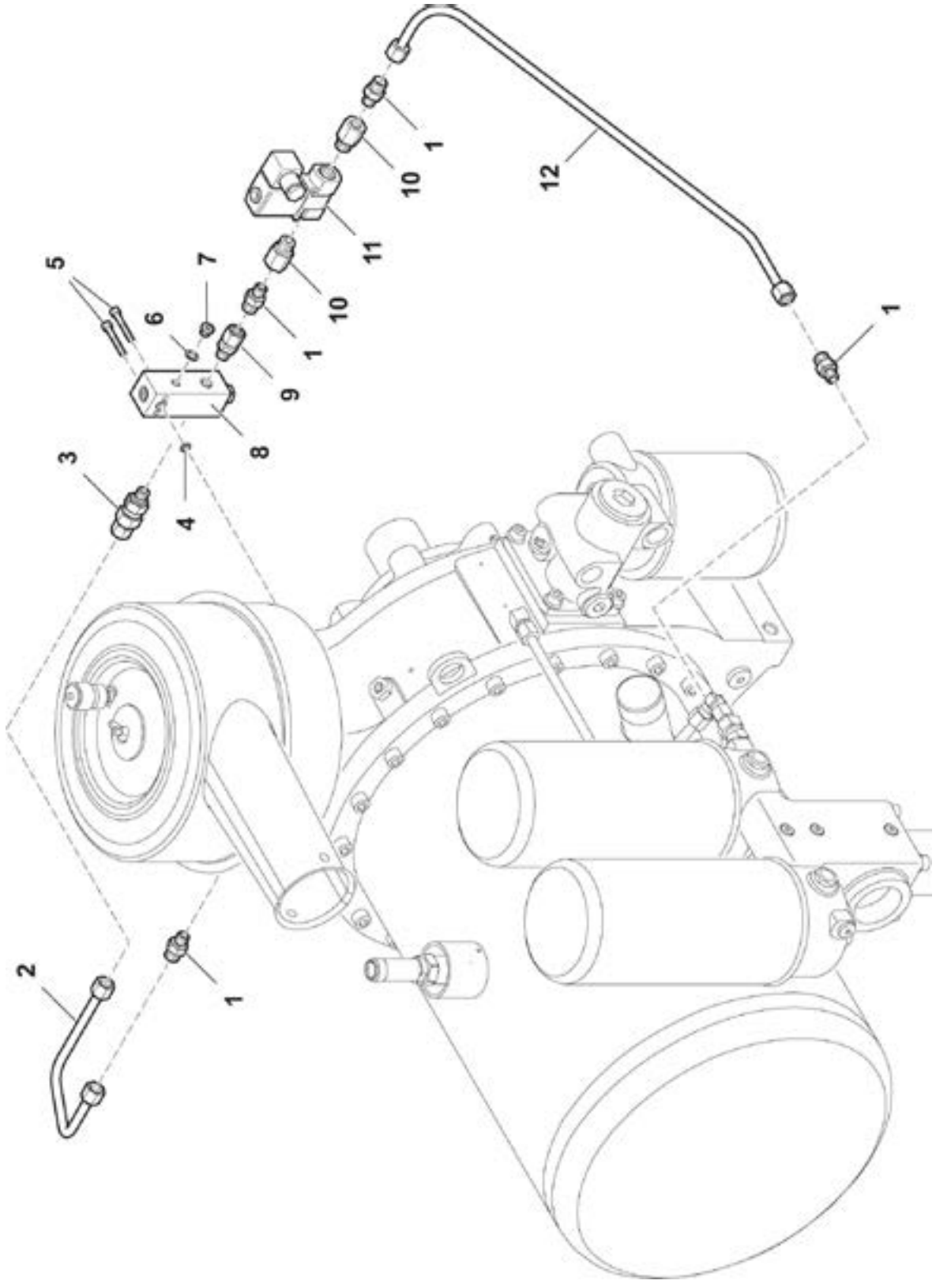

Fælledvej 10 • DK-7200 Grindsted • Tel. +45 76 72 13 00 • Fax +45 76 72 13 98

Screw compressor NK 200 - Single Parts: Control Block Electric				
Pos. no.	**Item no.**	**Pcs.**	**Description**	**Note**
1	2501N20017	4	Straight union	
2	250186567	1	Pipe cpl.	
3	2501108106	1	Non-return-valve	
4	2501N16628	1	O-ring	
5	2501N19538	2	Pan head screw	
6	2501N4051	1	Sealing ring	
7	2501N15688	1	Locking screw	
8	250186512-KD	1	Control valve cpl.	
9	2501101908	1	Straight union	
10	2501N9941		Reducing fitting with treat	
11			Solonoid Valve, Variants Parts List	
	2501N29860	1	2/2-way solonoid valve; 3/8“; 230 V 50 Hz; FPM; NO; PN 16. For control block electric 120680	Variant
	2501N29864	1	2/2-way solonoid valve; 3/8“; 24 V; 50 Hz; FPM; NO; PN 16. For control block electric 120681	Variant
	2501N30050	1	2/2-way solonoid valve; 3/8“; 110 V; 50 - 60 Hz; FPM; NO; PN 16. For control block electric 120682	Variant
	2501N30294	1	2/2-way solonoid valve; 3/8“; 24 V; DC; FPM; NO; PN 16. For control block electric 120683	Variant
12	2501111268		Hose with screw connection	

Screw compressor NK 200 - Single Parts: Electric Control Block, Control Valve

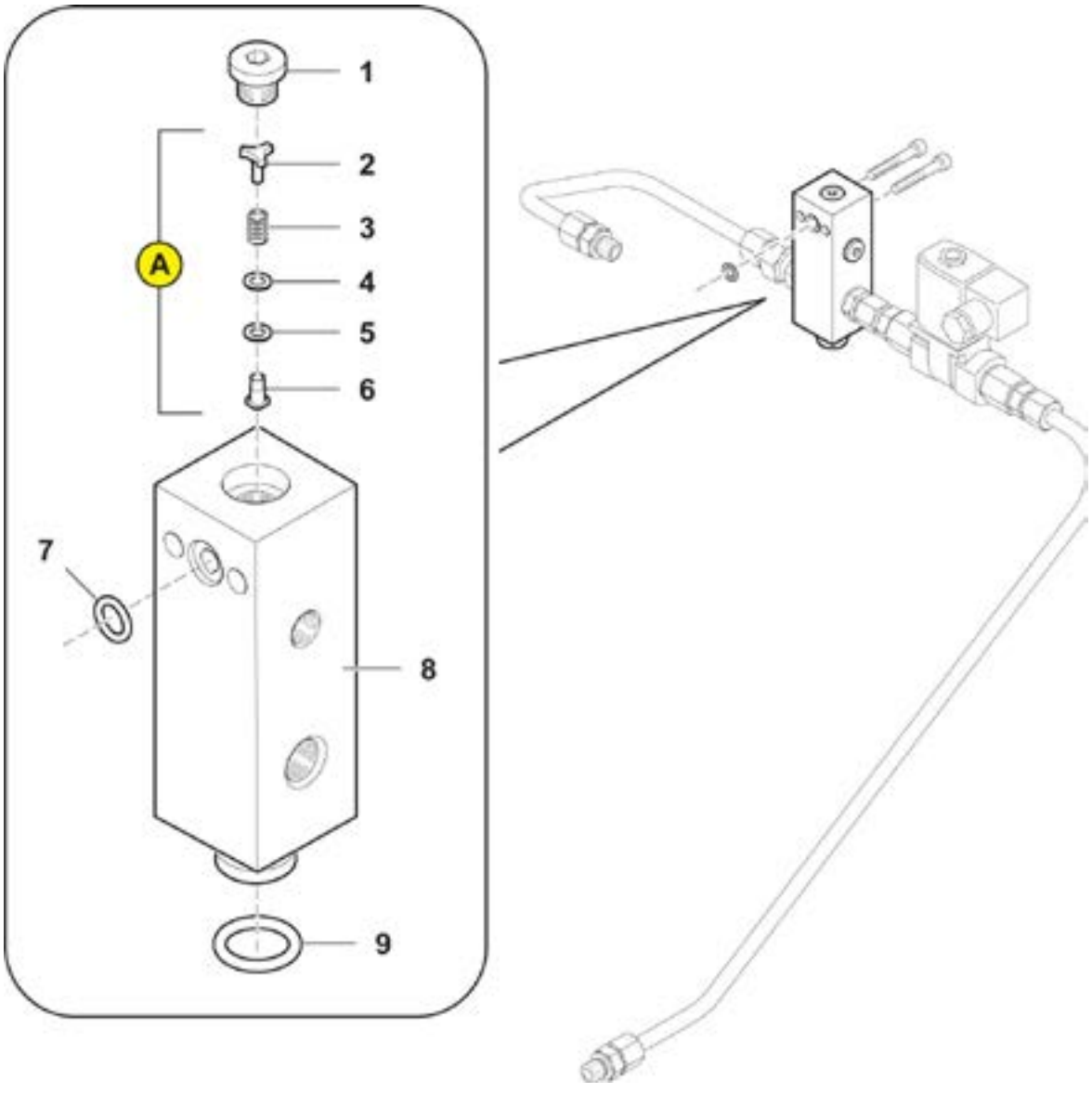

Fælledvej 10 • DK-7200 Grindsted • Tel. +45 76 72 13 00 • Fax +45 76 72 13 98

Screw compressor NK 200 - Single Parts: Electric Control Block, Control Valve				
Pos. no.	**Item no.**	**Pcs.**	**Description**	**Note**
1	2501N16504		Locking screw	
A	2501N28955		Valve Element	Available completely only
2	2501N28954	1	Washer	
3	2501N28953	1	Pressure spring	
4	2501N28952	1	Washer	
5	2501N28950	1	Washer	
6	2501N28949	1	Cone	
7	2501N16628	1	O-ring	
8	250186566	1	Control Valve	
9	2501N28935	1	O-ring	

Screw compressor NK 200 - Single Parts: Intake Control and Intake Filter

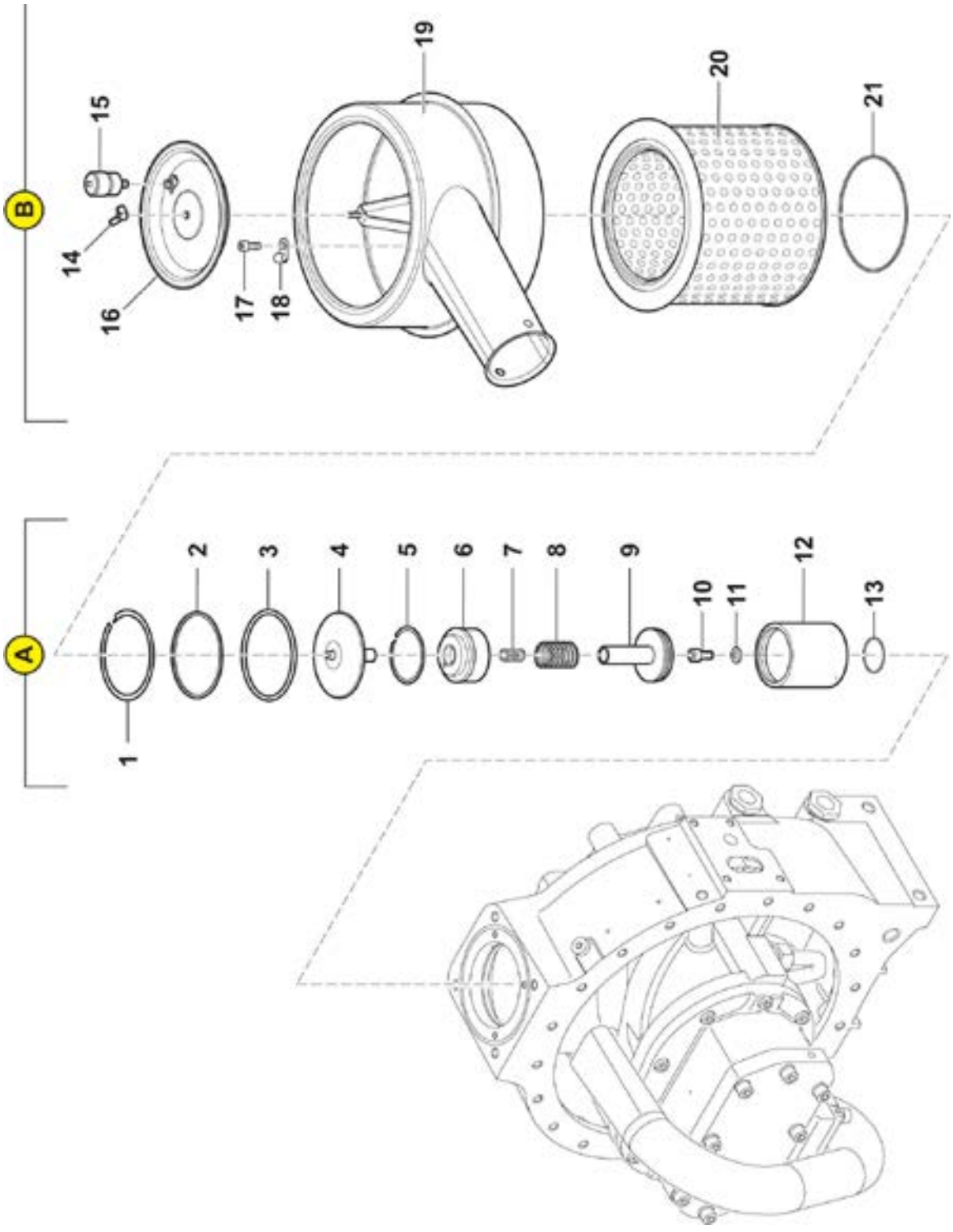

Fælledvej 10 • DK-7200 Grindsted • Tel. +45 76 72 13 00 • Fax +45 76 72 13 98

Screw compressor NK 200 - Single Parts: Intake Control and Intake Filter				
Pos. no.	**Item no.**	**Pcs.**	**Description**	**Note**
A			Intake Control	
1	2501110946	1	Snap ring CSSS Light	
2	2501116994	1	Ring	
3	2501110363	1	O-ring	
4	2501110356	1	Plate cpt.	
5	2501110947	1	Snap ring CSSS Light	
6	2501110355	1	Barrel head	
7	2501N28871	1	Pressure spring	
8	2501N28872	1	Pressure spring	
9	2501110356	1	Piston cpl.	
10	2501N1469	1	Pan head screw	
11	2501103820	1	Lock washer	
12	2501110354	1	Piston valve cylinder	
13	2501N28868	1	O-ring	
B			Intake Filter	
14	2501N36	1	Wing nut	
15	2501N2221	1	Underpressure controller	
16	2501N18904	1	Filter cap	
17	2501N19546	4	Pan head screw	
18	2501N18905	4	Clamp spring	
19	2501112016	1	Filter housing	
20	25030507	1	Intake filter cartridge	
21	2501N19123	1	O-ring	

BAUER Self-priming Unit - T-piece

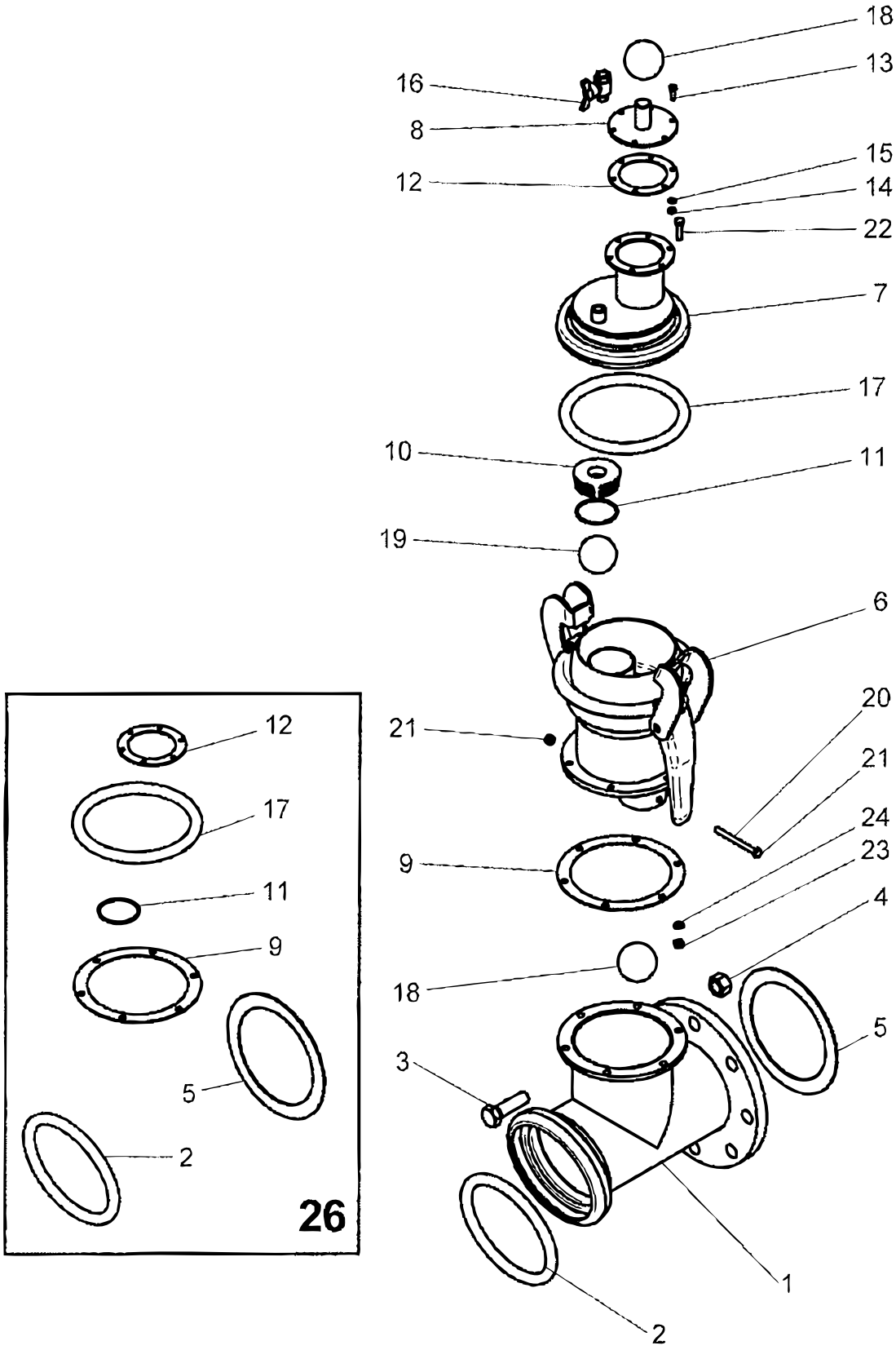

BAUER Self-priming Unit - T-piece				
Pos. no.	**Item no.**	**Pcs.**	**Description**	**Note**
1		1	Tee heavy HK159	
2		1	Rubber sealing ring S4/194	
3		8	Screw M20x70 DIN931 galv.	
4		8	Hex. nut DIN934 galv. M20	
5		1	Paper gasket NW150, ND16	
6		1	Separator, heavy	
7		1	Socket, heavy	
8		1	Connector, heavy	
9		1	Flange	
10		1	Rotating part with seal kit	
11		1	O-ring NBR70 64x3	
12		1	Cover gasket	
13		6	Hex. screw DIN933 galv. M6x20	
14		6	Hex. nut DIN934 galv. M6	
15		6	Spring washer DIN127-B6-VZ	
16		1	Ball valve male/female 3/8”	
17		1	Rubber sealing ring S4/159	
18		2	Siphon ball 60 100g	
19		1	Valve ball 160-180g	
20		1	Threaded rod DIN975 A2 RF M8 L=96	
21		2	Hex. nut DIN980 M8 self-locking	
22		6	Hex. screw DIN933 galv. M8x30	
23		6	Hex. nut DIN934 galv. M8	
24		6	Washer DIN126-9-vz.	
26	23093442150	1	Rep. Kit: Seal	

BAUER Self-priming Unit - Evacuating pump with hydro gear

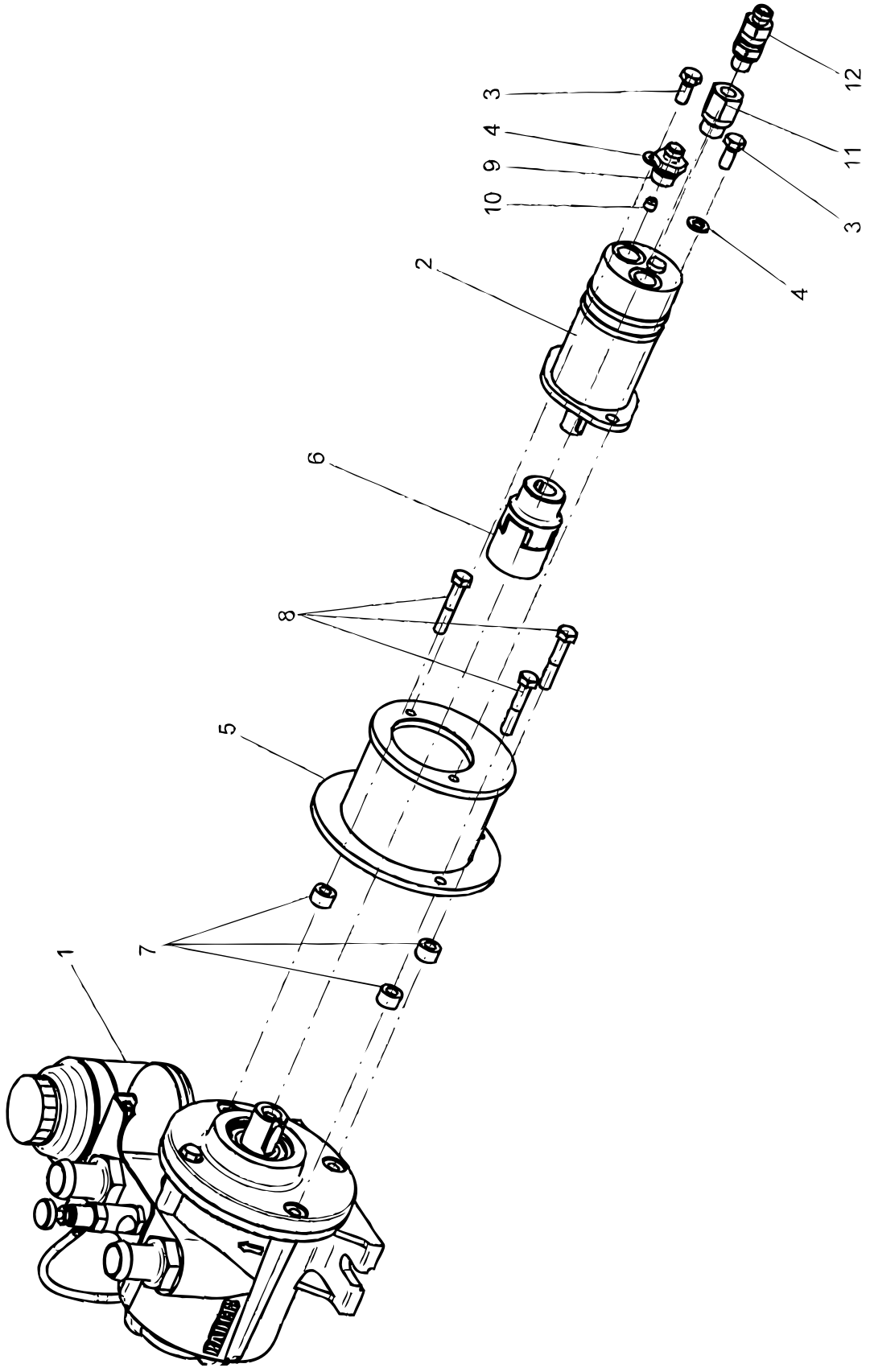

BAUER Self-priming Unit - Evacuating pump with hydro gear				
Pos. no.	**Item no.**	**Pcs.**	**Description**	**Note**
1	23093431310	1	Vacuum pump	
2	23093431485	1	Hydro motor for Primer	
3		2	Hex. Screw DIN933 galv. M8x16 8.8	
4		2	Lock washer DIN127 B8 galv.	
5		1	Spacer heavy	
6	23093431495	1	Coupling	
7		3	Spacer sleeve	
8		3	Hex. Screw DIN933 M8x40	
9		1	Screw 3/8” with thread	
10		1	Throttle	
11		1	Reduction 3/8”x1/4”	
12		1	Return valve 1/4”	

BAUER Self-priming Unit - Evacuating pump

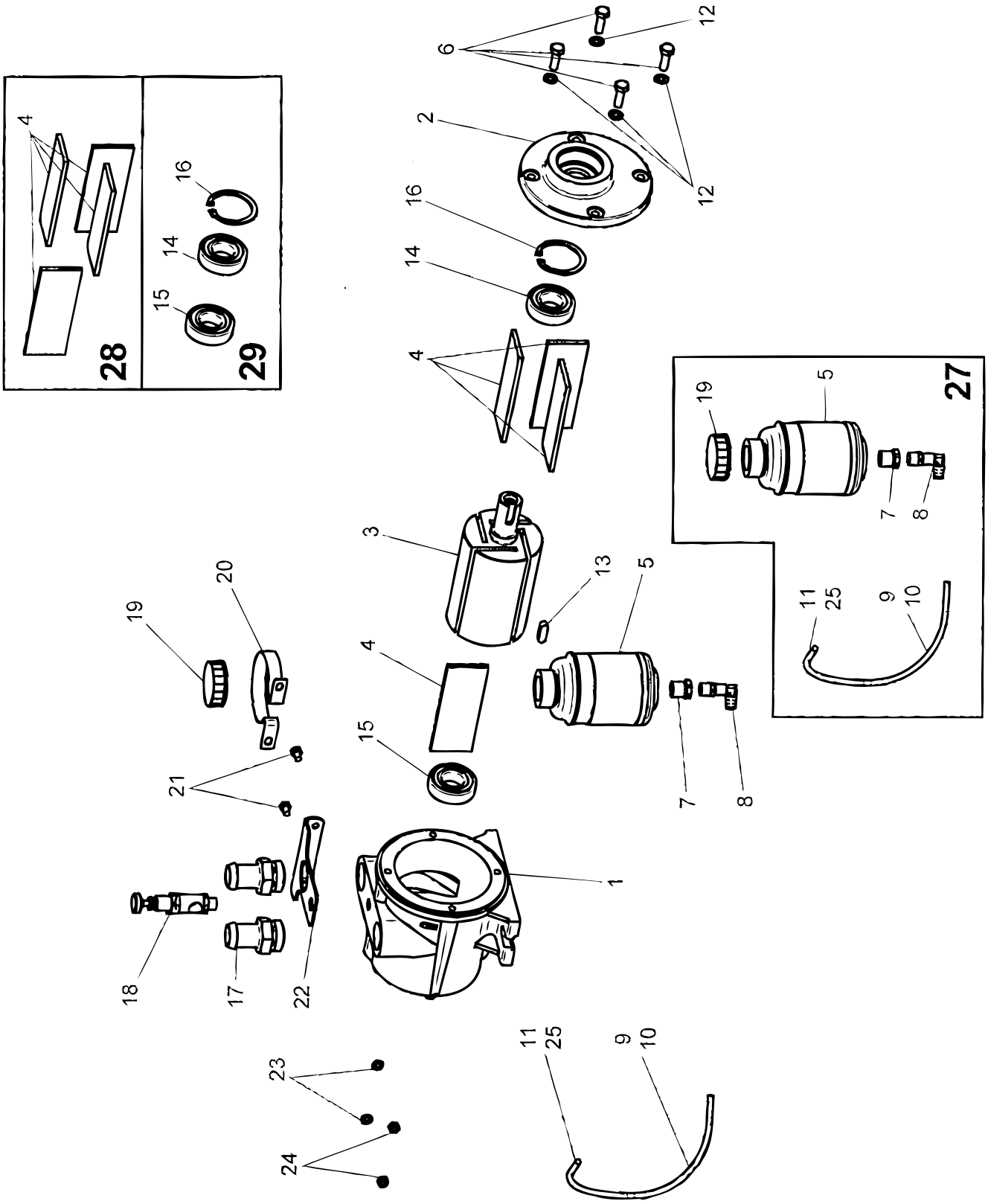

BAUER Self-priming Unit - Evacuating pump				
Pos. no.	**Item no.**	**Pcs.**	**Description**	**Note**
1		1	Housing	
2		1	Housing cover	
3		1	Rotor	
4		4	Lamelle HGW 2082 120X45	
5		1	Oil tank	
6		4	Hex screw DIN933 M8x30	
7		1	Plug, short 3/8” with 1/8” thread	
8		1	Elbow 4241-4-1/8”	
9		1	Polyamid hose 4X1 PA12	
10		2	Sleeve	
11		1	Serto SO 21-4-1/8”	
12		4	Lock washer DIN127 - B 8 galv	
13		1	Key A8X7X25	
14		1	Riku 6205 2RS	
15		1	Riku 6003 2RS	
16		1	Retaining ring DIN 472 52 X 2	
17		1	Hose nozzle 1”x27	
18		1	Oiler	
19		1	Cover	
20		1	Bracket	
21		2	Hex. Screw DIN933 M6x10	
22		1	Bracket	
23		2	Flat Washer A 6,4	
24		2	Lock nut M6	
25		1	Clamping ring	
27	23093442158	1	Repair kit: oil tank	
28	23093442160	1	Repair kit: Vanes	
29	23093442162	1	Repair kit: bearing - protection	